POWERTIP TECH. CORP.

SPECIFICATIONS

CUSTOMER	:	PTC
SAMPLE CODE	:	SH800480T013-IBC06
MASS PRODUCTION CODE	:	PH800480T013-IBC06
SAMPLE VERSION	:	01
SPECIFICATIONS EDITION	:	002
DRAWING NO. (Ver.)	:	JLMD-PH800480T013-IBC06_001
PACKAGING NO. (Ver.)	:	JPKG-PH800480T013-IBC06_001

Customer Approved

Date:

POWERTIP
2016.09.29
JS RD APPROVED

Approved	Checked	Designer
閆偉	劉進	張斌

☐ Preliminary specification for design input

■ Specification for sample approval

POWERTIP TECH. CORP.

Headquarters:

No.8, 6th Road, Taichung Industrial Park,

Taichung, Taiwan

台中市 407 工業區六路 8 號

TEL: 886-4-2355-8168

FAX: 886-4-2355-8166

E-mail: sales@powertip.com.tw

Http://www.powertip.com.tw

History of Version

Date (mm / dd / yyyy)	Ver.	Edi.	Description	Page	Design by
07/13/2016	01	001	New Drawing.	-	張斌
09/08/2016	01	002	New Sample	-	張斌

Total: 28 Page

Contents

1. SPECIFICATIONS
   - 1.1 Features
   - 1.2 Mechanical Specifications
   - 1.3 Absolute Maximum Ratings
   - 1.4 DC Electrical Characteristics
   - 1.5 Optical Characteristics
   - 1.6 Backlight Characteristics
   - 1.7 Touch Panel Characteristics

2. MODULE STRUCTURE
   - 2.1 Counter Drawing
     - 2.1.1 LCM Mechanical Diagram
     - 2.1.2 Block Diagram
   - 2.2 Interface Pin Description
   - 2.3 Timing Characteristics
     - 2.3.1 Signal AC Characteristics
     - 2.3.2 Input Timing Setting
     - 2.3.3 Power On/Off Characteristics

3. QUALITY ASSURANCE SYSTEM
   - 3.1 Quality Assurance Flow Chart
   - 3.2 Inspection Specification

4. RELIABILITY TEST
   - 4.1 Reliability Test Condition

5. PRECAUTION RELATING PRODUCT HANDLING
   - 5.1 Safety
   - 5.2 Handling
   - 5.3 Storage
   - 5.4 Terms of Warranty

Appendix：

LCM Drawing
Packaging

1. SPECIFICATIONS

1.1 Features

Item	Standard Value
Display Type	800 * (RGB) * 480
LCD Type	a-Si TFT , Normally white , Transmissive type
Screen size(inch)	7.0 inch
Viewing Direction	6 O'clock
Backlight Type	LED B/L
Interface	RGB Interface
ROHS	THIS PRODUCT CONFORMS THE ROHS OF PTC Detail information please refer website : http://www.powertip.com.tw/news.php?area_id_view=1085560481/

1.2 Mechanical Specifications

Item	Standard Value	Unit
Outline Dimension	192.96 (W) * 110.76 (L) *5.3 (H)	mm

LCD panel

Item	Standard Value	Unit
Active Area (LCD)	154.08 (W) * 85.92 (L)	mm

Note：For detailed information please refer to LCM drawing.

1.3 Absolute Maximum Ratings

Module

Item	Symbol	Condition	Min.	Max.	Unit	Remark
Power Supply Voltage	DV_{DD}	GND=0	-0.3	5.0	V	-
	AV_{DD}		6.5	13.5	V	
	V_{GH}		-0.3	40.0	V	
	V_{GL}	AGND=0	-20.0	0.3	V	
	V_{GH} - V_{GL}	-	-	40.0	V	
Operating Temperature	T_{OP}	-	-20	70	°C	
Storage Temperature	T_{ST}	-	-30	80	°C	

The absolute maximum rating values of this product are not allowed to be exceeded at any times. Should a module be used with any of the absolute maximum ratings exceeded, the characteristics of the module may not be recovered, or in an extreme case, the module may be permanently destroyed.

1.4 DC Electrical Characteristics

GND = 0V, Ta = 25°C

Item	Symbol	Min.	Typ.	Max.	Unit	Remark
Supply Voltage	DV_{DD}	3.0	3.3	3.6	V	-
	V_{GH}	15.3	16.0	16.7		
	V_{GL}	-7.7	-7.0	-6.3		
	AV_{DD}	10.2	10.4	10.6		
VCOM	V_{COM}	3.8	4.0	4.2	V	
Input signal Voltage	V_{IH}	$0.7DV_{DD}$	-	DV_{DD}	V	
	V_{IL}	0	-	$0.3DV_{DD}$		
Supply Current	I (DV_{DD})	-	4.0	10	mA	DVDD=3.3V
	I (AV_{DD})	-	20	50		AVDD=10.4V
	I_{GH}	-	0.2	1.0		VGH=16.0V
	I_{GL}	-	0.2	1.0		VGL=-7.0V

1.5 Optical Characteristics

TFT LCD Module DV_{DD} = 3.3 V, Ta=25°C

Item		Symbol	Condition	Min.	Typ.	Max.	unit	-
Response time	Rise	Tr	-	-	10	20	ms	Note 2
	Fall	Tf		-	15	30		
Viewing angle	Top	θY+	CR ≥ 10	40	50	-	Deg.	Note 4
	Bottom	θY-		60	70	-		
	Left	θX-		60	70	-		
	Right	θX+		60	70	-		
Contrast ratio		CR	If= 160 mA	400	500	-	-	Note 3
Color of CIE Coordinate (With B/L&TP)	White	X		0.24	0.29	0.34	-	Note1
		Y		0.27	0.32	0.37		
	Red	X		0.51	0.56	0.61		
		Y		0.29	0.34	0.39		
	Green	X		0.28	0.33	0.38		
		Y		0.54	0.59	0.64		
	Blue	X		0.10	0.15	0.20		
		Y		0.02	0.07	0.12		
Average Brightness Pattern=white display (With B/L&TP)*1		IV	If= 160 mA	310	440	-	cd/m^2	Note1
Uniformity (With B/L&TP)*2		△B	If= 160 mA	70	-	-	%	Note1

Note 1:

*1：△B=B(min) / B(max) * 100%

*2：Measurement Condition for Optical Characteristics:

a：Environment: 25℃±5℃ / 60±20%R.H，no wind，dark room below 10 Lux at typical lamp current and typical operating frequency.

b：Measurement Distance: 500 ± 50 ㎜ ，(θ= 0°)

c：Equipment: TOPCON BM-7 fast，(field 1°)，after 10 minutes operation.

d：The uncertainty of the C.I.E coordinate measurement ±0.01，Average Brightness ± 4%

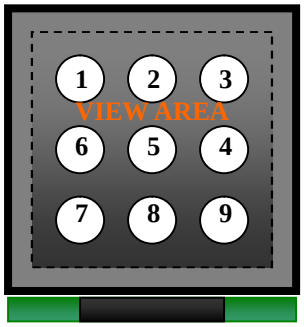

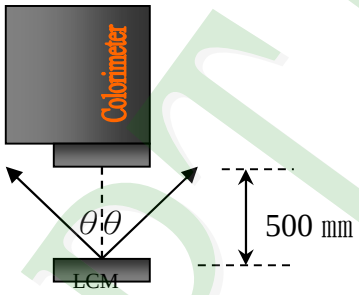

Colorimeter=BM-7 fast

To be measured at the center area of panel with a viewing cone of 1° by Topcon luminance meter BM-7, after 10 minutes operation (module)

Note2: Definition of response time:

The output signals of photo detector are measured when the input signals are changed from “black” to “white”(falling time) and from “white” to “black”(rising time), respectively. The response time is defined as the time interval between the 10% and 90% of Amplitudes.

Refer to figure as below:

Normally White

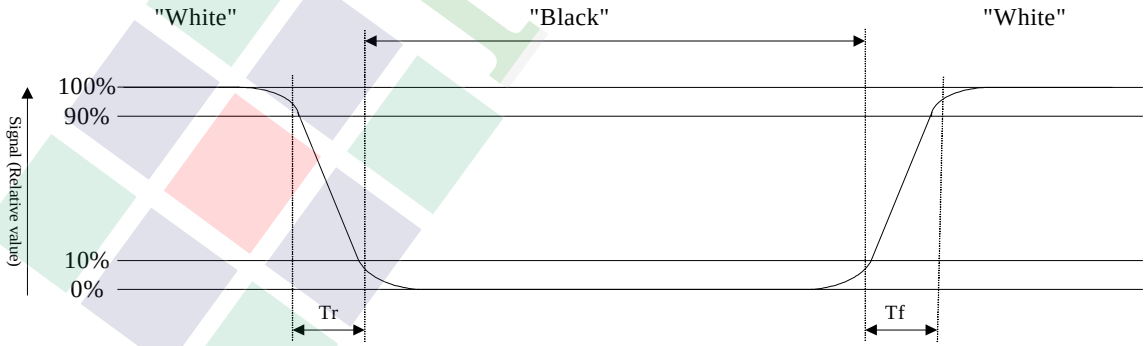

Normally Black

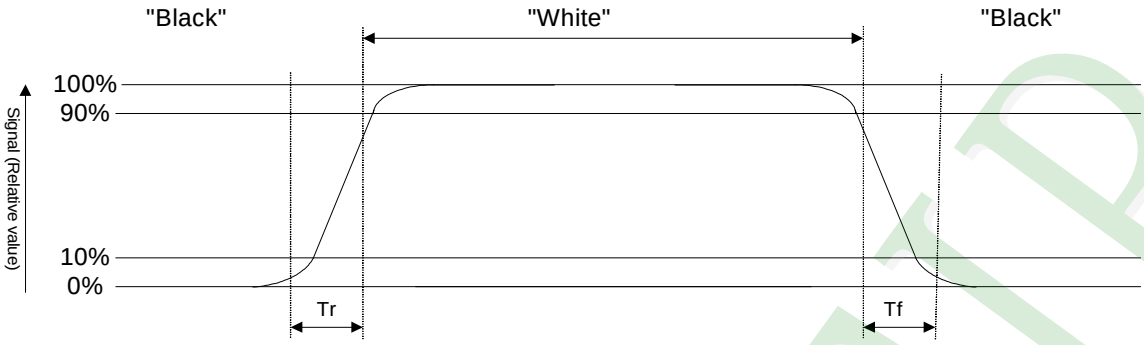

Note3: Definition of contrast ratio:

Contrast ratio is calculated with the following formula

$$\text{Contrast ratio (CR)} = \frac{\text{Photo detector output when LCD is at “White” state}}{\text{Photo detector output when LCD is at “Black” state}}$$

Note4: Definition of viewing angle:

Refer to figure as below:

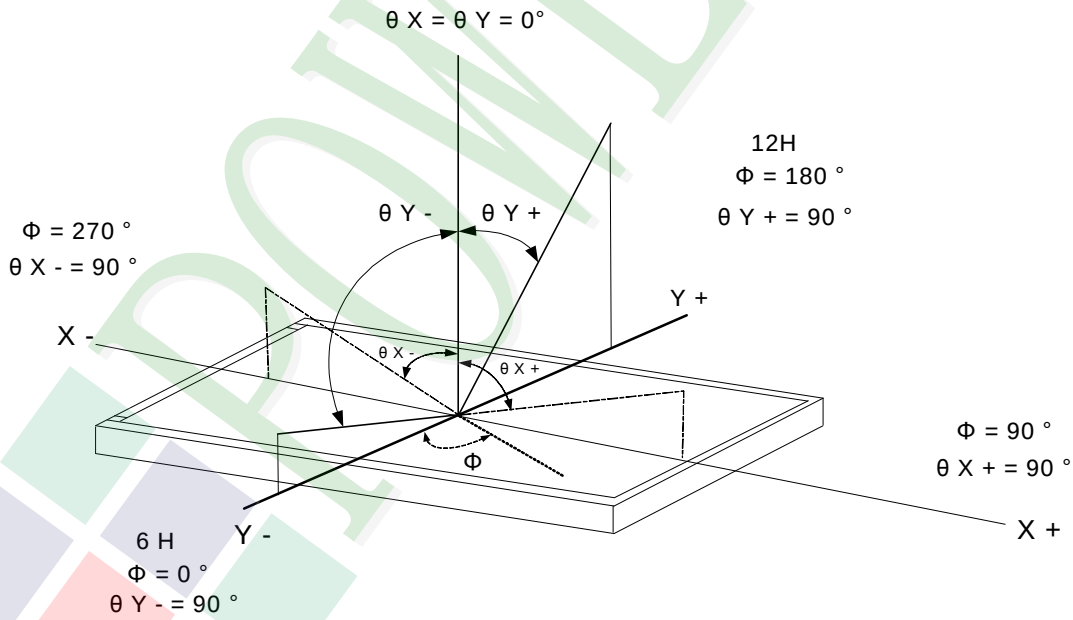

1.6 Backlight Characteristics

Maximum Ratings

Item	Symbol	Conditions	Min.	Max.	Unit
LED Forward Current	IF	Ta =25℃	-	30*8	mA
LED Reverse Voltage	VR		-	5	V
Power consumption	Pd		-	90*24	mW

Electrical / Optical Characteristics

Item	Symbol	Conditions	Min.	Typ.	Max.	Unit
Forward Voltage	VF	If= 160 mA	9.0	9.6	10.2	V
Average Brightness (Without LCD &T/P)	IV		8600	10300	-	cd/m^2
CIE Color Coordinate (Without LCD &T/P)	X		0.25	0.28	0.31	-
	Y		0.26	0.29	0.32	
Color	White					

Internal Circuit

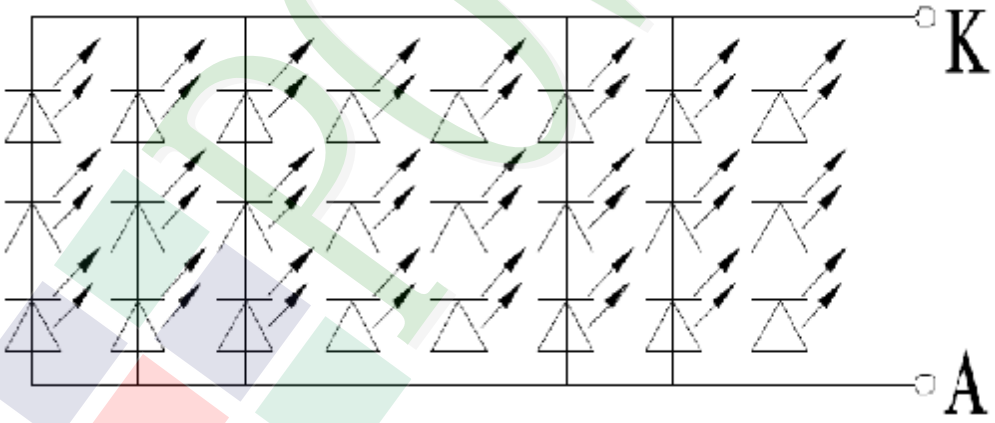

Other Description

Item	Conditions	Description
Life Time	Ta =25℃ IF= 160 mA	20000 hrs

1.7 Touch Panel Characteristics

Features

Item	Standard Value
Touch Panel Size	7”
Power Supply Voltage	3.3V
Input Method	Finger Or Conductive Pen
Output Interface	I^2C
IC	FT5426

Mechanical Specifications

Item	Standard Value	Unit
Outside Dimension	192.96 (W) x 110.76 (H)	mm
Viewing Area	154.88 (W) x 86.72 (H)	mm
Active Area	155.88 (W) x 87.72 (H)	mm

Absolute Maximum Ratings

Item	Symbol	Condition	Min.	Max.	Unit
Supply voltage	VDD	-	-0.3	3.6	V
Operating Temperature	T_{OP}	-	-20	+70	°C
Storage Temperature	T_{ST}	-	-30	+80	°C

Optical Characteristics

Item	Standard Value	Unit
Total light transmittance	85% or more	-
Hardness	⩾7H	-

2. MODULE STRUCTURE

2.1 Counter Drawing

2.1.1 LCM Mechanical Diagram

* See Appendix

2.1.2 Block Diagram

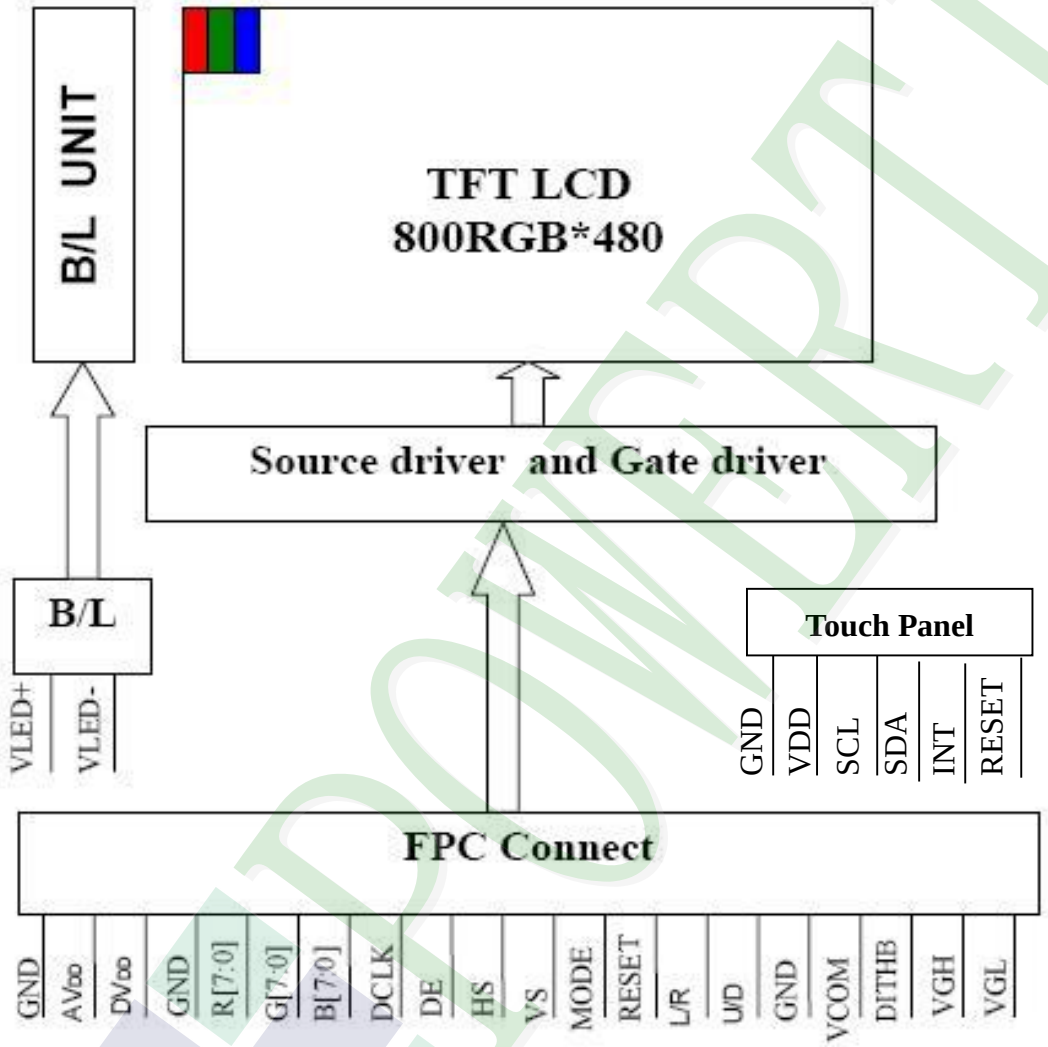

2.2 Interface Pin Description

Pin NO.	SYMBOL	DESCRIPTION	Type:Remark
1	V_{LED+}	Power For LED backlight (+).	Power
2	V_{LED+}	Power For LED backlight (+).	Power
3	V_{LED-}	Power For LED backlight (-).	Power
4	V_{LED-}	Power For LED backlight (-).	Power
5	GND	Power ground.	Power
6	V_{com}	Common voltage.	I
7	DV_{DD}	Power for Digital Circuit.	I
8	MODE	DE/SYNC mode select.	I,Note 1
9	DE	Data Input Enable.	I
10	VS	Vertical Sync Input.	I
11	HS	Horizontal Sync Input.	I
12	B7	Blue Data(MSB).	I
13	B6	Blue Data.	I
14	B5	Blue Data.	I
15	B4	Blue Data.	I
16	B3	Blue Data.	I
17	B2	Blue Data.	I
18	B1	Blue Data.	I:Note 2
19	B0	Blue Data(LSB).	I:Note 2
20	G7	Green Data(MSB).	I
21	G6	Green Data.	I
22	G5	Green Data.	I
23	G4	Green Data.	I
24	G3	Green Data.	I
25	G2	Green Data.	I
26	G1	Green Data.	I:Note 2
27	G0	Green Data(LSB).	I:Note 2
28	R7	Red Data(MSB).	I
29	R6	Red Data.	I
30	R5	Red Data.	I
31	R4	Red Data.	I
32	R3	Red Data.	I
33	R2	Red Data.	I
34	R1	Red Data.	I:Note 2
35	R0	Red Data(LSB).	I:Note 2
36	GND	Power Ground	Power
37	DCLK	Sample clock	I:Note 3

Pin NO.	SYMBOL	DESCRIPTION	Type:Remark
38	GND	Power Ground.	Power
39	L/R	Left / right selection.	I:Note 4
40	U/D	Left / right selection.	I:Note 4
41	V_{GH}	Gate On Voltage.	Power
42	V_{GL}	Gate OFF Voltage.	Power
43	AV_{DD}	Power for Analog Circuit.	Power
44	RESET	Global reset pin.	I:Note 5
45	NC	No connection.	-
46	V_{COM}	Common Voltage.	I
47	DITHB	Dithering Function.	I:Note 6
48	GND	Power Ground.	Power
49	NC	No connection.	-
50	NC	No connection.	-

T/P PIN

Pin No.	Symbol	Function
1	GND	Ground. (T/P)
2	VDD	Power.(T/P)
3	SCL	I^2C Clock. (T/P)
4	SDA	I^2C Data.(T/P)
5	INT	Active Low. (T/P)
6	RESET	RESET. (T/P)

I:input

Note 1: DE/SYNC mode select. Normally pull high.
When select DE mode, MODE=”1”, VS and HS must pull high.
When select SYNC mode, MODE= ”0”, DE must be grounded.

Note 2: When input 18 bits RGB data, the two low bits of R,G and B data must be grounded.

Note 3: Data shall be latched at the falling edge of DCLK.

Note 4: Selection of scanning mode.

Setting of scan control input		Scanning direction
U/D	L/R	
GND	DVDD	Up to down, left to right
DVDD	GND	Down to up, right to left
GND	GND	Up to down, right to left
DVDD	DVDD	Down to up, left to right

Note 5: Global reset pin. Active low to enter reset state. Suggest to connect with an RC reset circuit for stability. Normally pull high.

Note 6: Dithering function enable control, normally pull high.
When DITHB="1",Disable internal dithering function.
When DITHB="0",Enable internal dithering function.

2.3 Timing Characteristics

2.3.1 Signal AC Characteristics

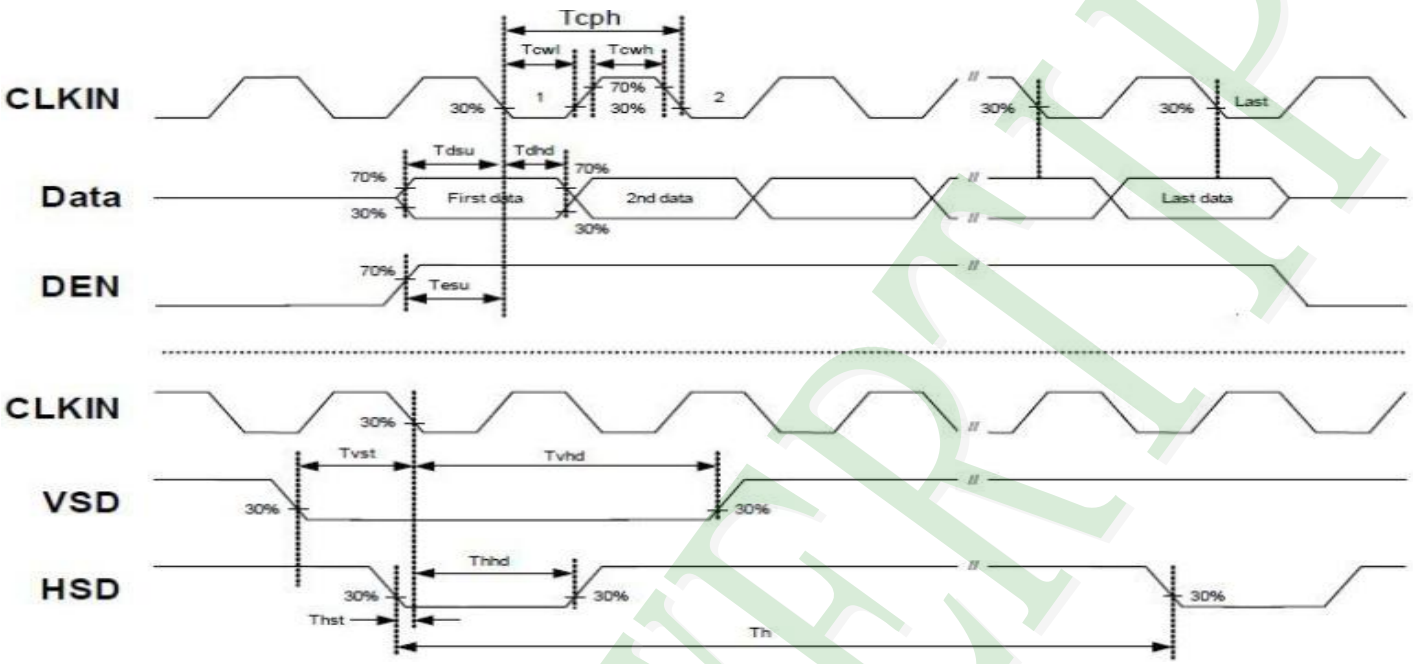

Item	Symbol	Values			Unit	Remark
		Min	Typ	Max.		
HS setup time	T_{hst}	8	-	-	ns	
HS hold time	T_{hhd}	8	-	-	ns	
VS setup time	T_{vst}	8	-	-	ns	
VS setup time	T_{vhd}	8	-	-	ns	
VS setup time	T_{dsu}	8	-	-	ns	
VS setup time	T_{dhd}	8	-	-	ns	
DE setup time	T_{esu}	8	-	-	ns	
DE hole time	T_{ehd}	8	-	-	ns	
DV_{DD} Power On Slew rate	T_{POR}	-	-	20	ms	From 0 to 90%DV_{DD}
RESET pulse width	T_{Rst}	1	-	-	ms	
DCLK cycle time	T_{coh}	20	-	-	ns	
DCLK pulse duty	T_{cwh}	40	50	60	%	

2.3.2 Input Timing Setting

Item	Symbol	Values			Unit	Remark
		Min.	Typ.	Max.		
Horizontal Display Area	Thd		800		DCLK	
DCLK Frequency	Fclk	26.4	33.3	46.8	MHz	
One Horizontal Line	Th	862	1056	1200	DCLK	
HS pulse width	Thpw	1		40	DCLK	
HS Blanking	Thb	46	46	46	DCLK	
HS Front Porch	Thfp	16	210	354	DCLK	

Item	Symbol	Values			Unit	Remark
		Min.	Typ.	Max.		
Vertical Display Area	Tvd		480		TH	
VS period time	Tv	510	525	650	TH	
VS pulse width	Tvpw	1		20	TH	
VS Blanking	Tvb	23	23	23	TH	
VS Front Porch	Tvfp	7	22	147	TH	

Horizontal input timing diaqram

Vertical input timing diaqram

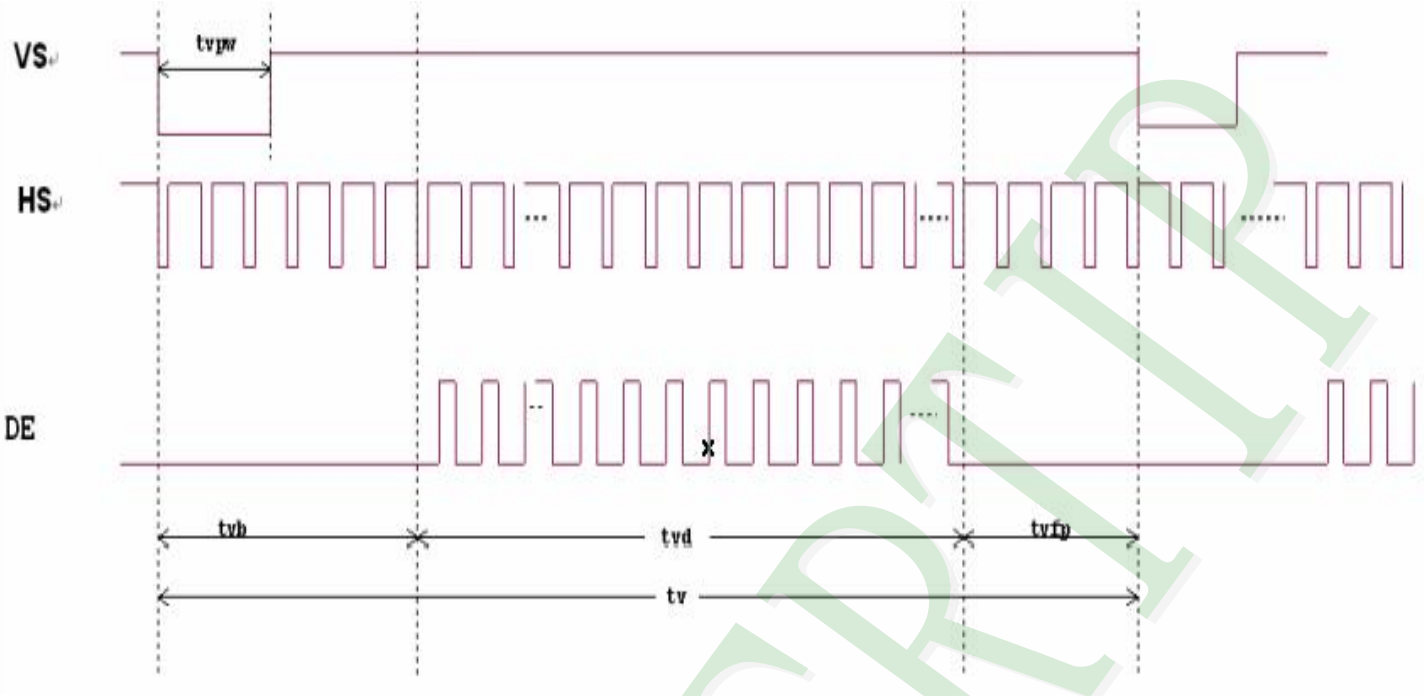

2.3.3 Power On/Off Characteristics

a. Power on:

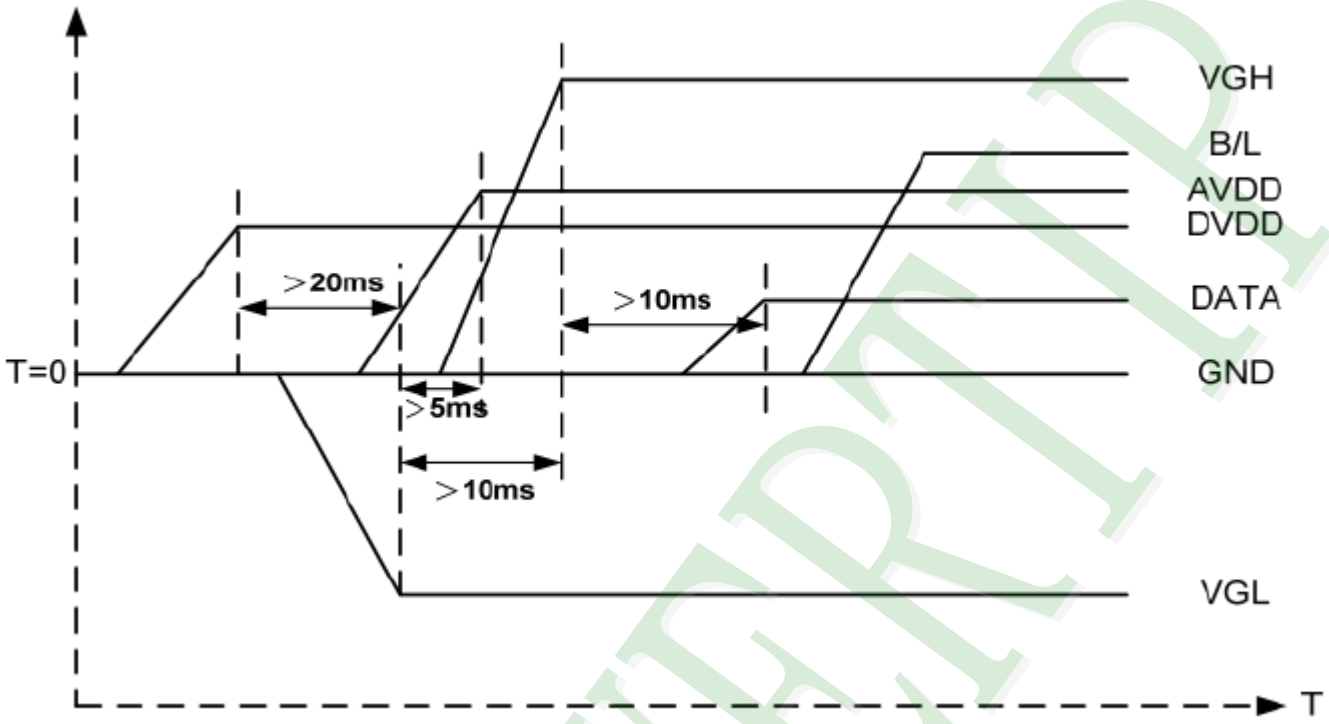

$DV_{DD} \rightarrow VGL \rightarrow AVDD \rightarrow VGH \rightarrow Data \rightarrow B/L$

b. Power off:

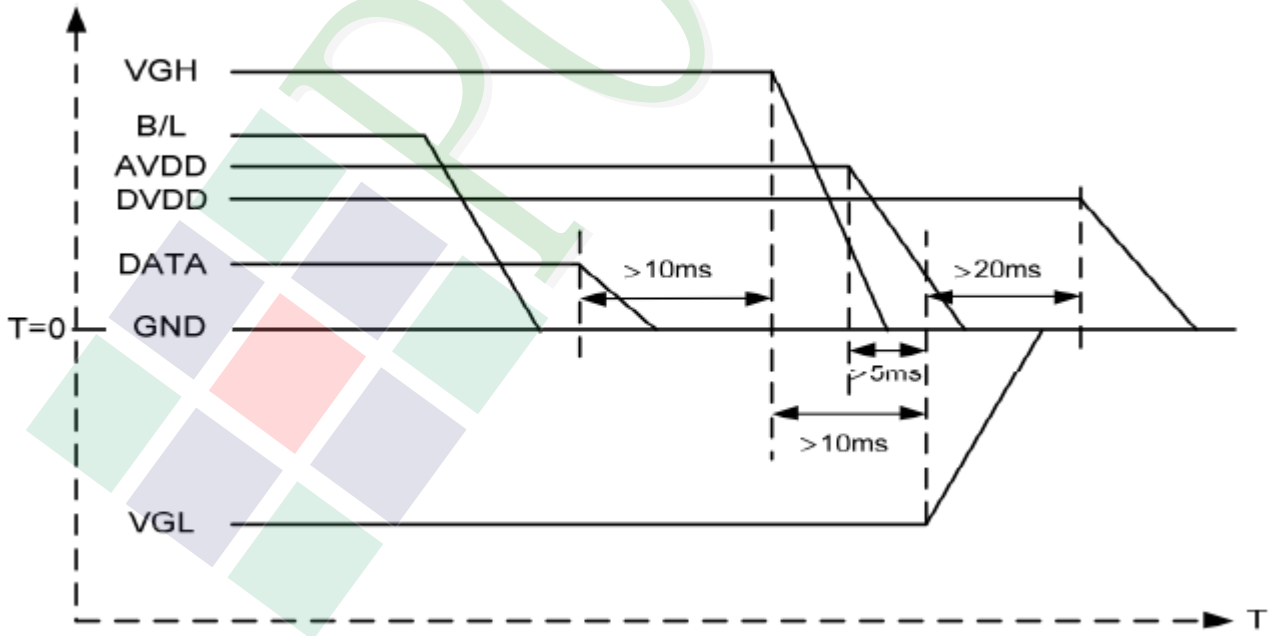

$B/L \rightarrow Data \rightarrow VGH \rightarrow AVDD \rightarrow VGL \rightarrow DV_{DD}$

3. QUALITY ASSURANCE SYSTEM

3.1 Quality Assurance Flow Chart

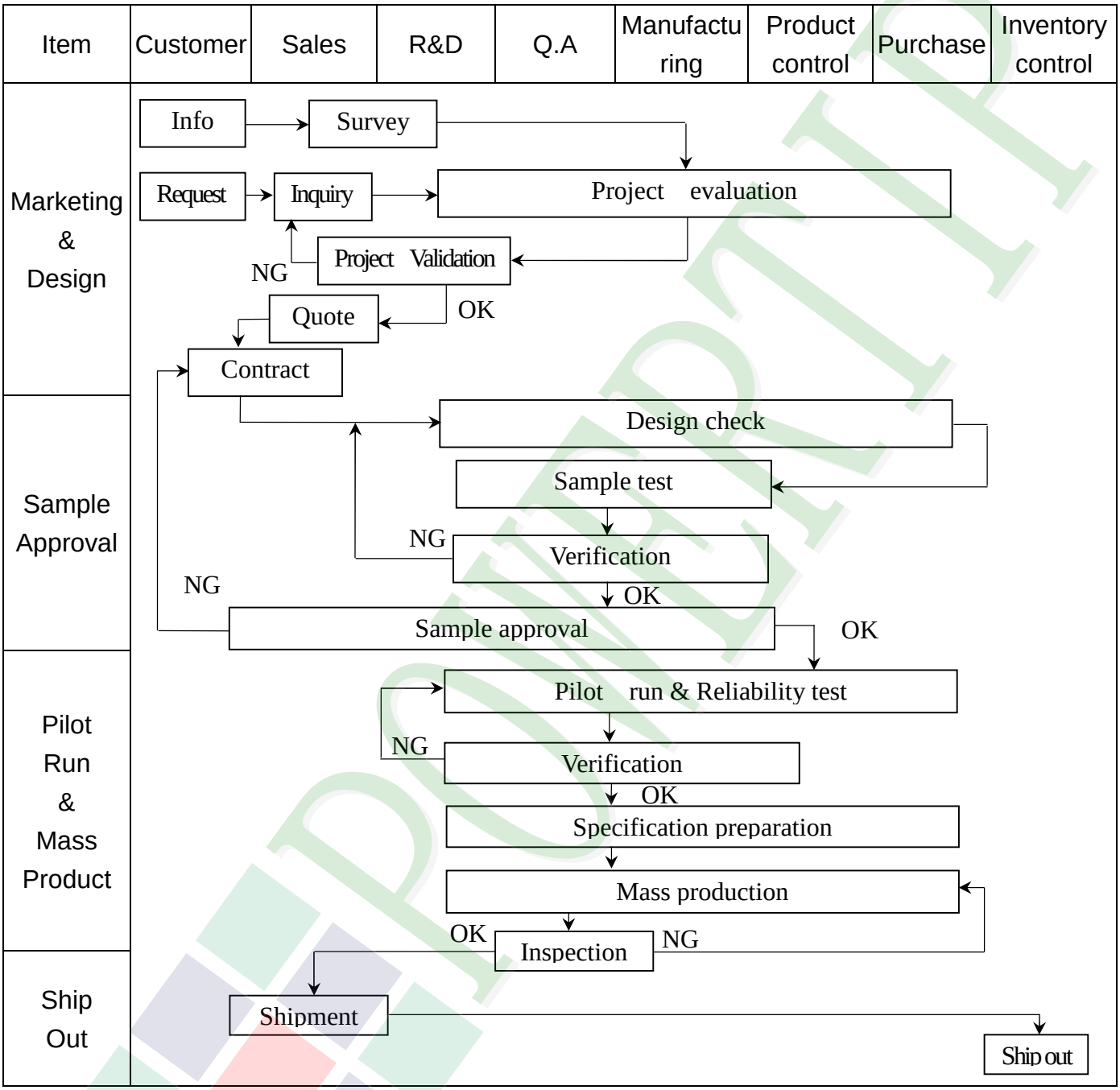

Item	Customer	Sales	R&D	Q.A	Manufacturing	Product control	Purchase	Inventory control
Sales Service	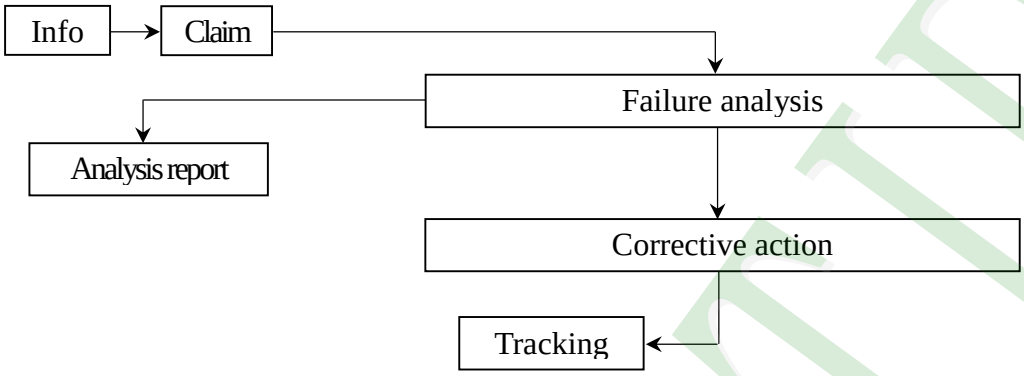							
Q.A Activity	1. ISO 9001 Maintenance Activities 2. Process improvement proposal 3. Equipment calibration 4. Education And Training Activities 5. Standardization Management							

3.2. Inspection Specification

◆Scope：The document shall be applied to TFT-LCD Module for 3.5″ ~10″ (Ver.B01).

◆Inspection Standard：MIL-STD-105E Table Normal Inspection Single Sampling Level Ⅱ.

◆Equipment：Gauge、MIL-STD、Powertip Tester、Sample

◆Defect Level：Major Defect AQL： 0.4 ； Minor Defect AQL： 1.5

◆OUT Going Defect Level：Sampling.

◆Standard of the product appearance test：

a. Manner of appearance test：

(1). The test best be under 20W×2 fluorescent light，and distance of view must be at 30 cm.

(2). The test direction is base on about around 45° of vertical line.

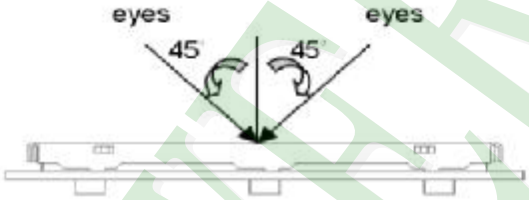

(3). Definition of area.

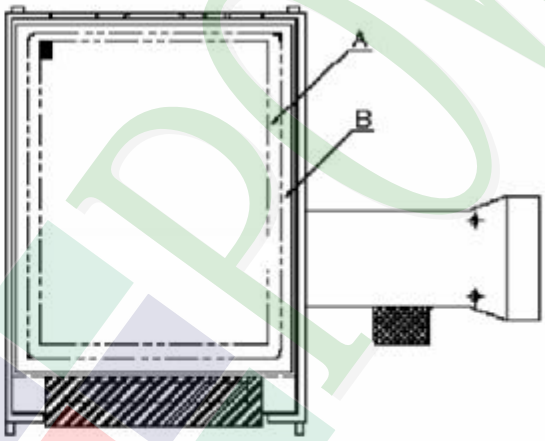

A area : viewing area

B area : Outside of viewing area

(4). Standard of inspection： (Unit：mm)

◆Specification For TFT-LCD Module 3.5″ ~10″ : (Ver.B01)

NO	Item	Criterion	Level
01	Product condition	1.1 The part number is inconsistent with work order of production.	Major
		1.2 Mixed product types.	Major
		1.3 Assembled in inverse direction.	Major
02	Quantity	2.1 The quantity is inconsistent with work order of production.	Major
03	Outline dimension	3.1 Product dimension and structure must conform to structure diagram.	Major
04	Electrical Testing	4.1 Missing line character and icon.	Major
		4.2 No function or no display.	Major
		4.3 Display malfunction.	Major
		4.4 LCD viewing angle defect.	Major
		4.5 Current consumption exceeds product specifications.	Major
05	Dot defect (Bright dot、Dark dot) On -display	Dot Defect: Item / Acceptance (Q'ty): Bright Dot ≦ 4; Dark Dot ≦ 5; Joint Dot ≦ 3; Total ≦ 7 5.1 Inspection pattern : full white , full black , Red , Green and blue screens. 5.2 It is defined as dot defect if defect area >1/2 dot. 5.3 The distance between two dot defect ≥5 mm.	Minor

◆Specification For TFT-LCD Module 3.5″ ~10″ : (Ver.B01)

<table>
<tr><th>NO</th><th>Item</th><th>Criterion</th><th>Level</th></tr>
<tr><td>06</td><td>Black or white dot、scratch、contamination

Round type
 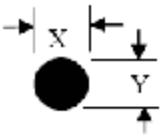

Φ=(x+y) / 2

Line type
 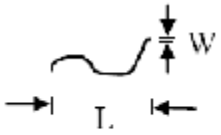
</td><td>6.1 Round type (Non-display or display) :
<table><tr><th rowspan="2">Dimension (diameter : Φ)</th><th colspan="2">Acceptance (Q'ty)</th></tr><tr><th>A area</th><th>B area</th></tr><tr><td>Φ ≦ 0.25</td><td>Ignore</td><td rowspan="4">Ignore</td></tr><tr><td>0.25 ＜ Φ ≦ 0.50</td><td>5</td></tr><tr><td>Φ ＞ 0.50</td><td>0</td></tr><tr><td>Total</td><td>5</td></tr></table>
6.2 Line type(Non-display or display) :
<table><tr><th rowspan="2">Length (L)</th><th rowspan="2">Width (W)</th><th colspan="2">Acceptance (Q'ty)</th></tr><tr><th>A area</th><th>B area</th></tr><tr><td>---</td><td>W ≦ 0.03</td><td>Ignore</td><td rowspan="4">Ignore</td></tr><tr><td>L ≦10.0</td><td>0.03 ＜ W ≦ 0.05</td><td>4</td></tr><tr><td>L ≦5.0</td><td>0.05 ＜ W ≦ 0.10</td><td>2</td></tr><tr><td>---</td><td>W ＞0.10</td><td>As round type</td></tr><tr><td colspan="2">Total</td><td>5</td></tr></table></td><td>Minor</td></tr>
<tr><td>07</td><td>Polarizer Bubble</td><td><table><tr><th rowspan="2">Dimension (diameter : Φ)</th><th colspan="2">Acceptance (Q'ty)</th></tr><tr><th>A area</th><th>B area</th></tr><tr><td>Φ ≦ 0.25</td><td>Ignore</td><td rowspan="4">Ignore</td></tr><tr><td>0.25 ＜ Φ ≦ 0.50</td><td>4</td></tr><tr><td>0.50 ＜ Φ ≦ 0.80</td><td>1</td></tr><tr><td>Φ ＞ 0.80</td><td>0</td></tr><tr><td>Total</td><td>5</td></tr></table></td><td>Minor</td></tr>
</table>

◆Specification For TFT-LCD Module 3.5″ ~10″ : (Ver.B01)

NO	Item	Criterion	Level
08	The crack of glass	Symbols : X : The length of crack Y : The width of crack. Z : The thickness of crack W : terminal length t : The thickness of glass a : LCD side length 8.1 General glass chip : 8.1.1 Chip on panel surface and crack between panels: 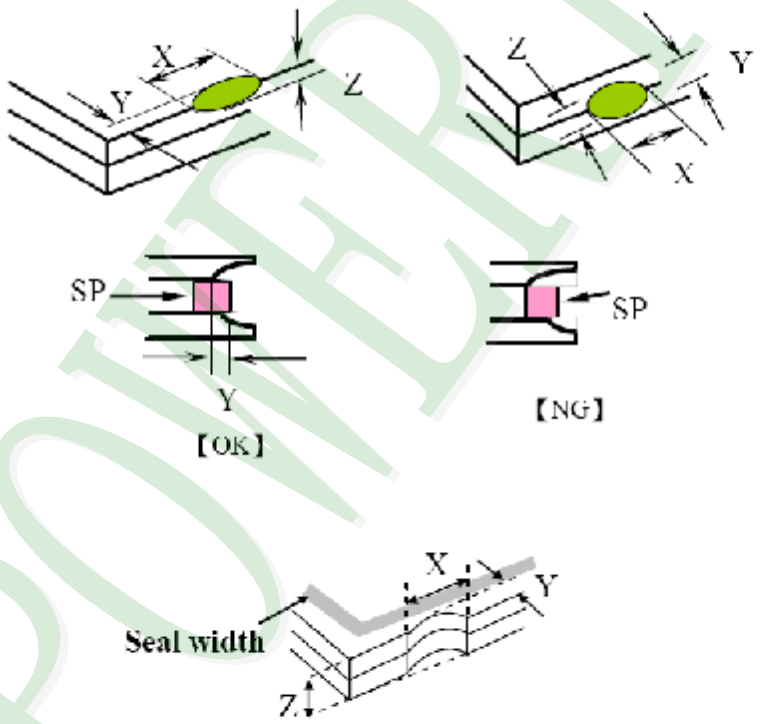 X / Y / Z ≦ a / Crack can't enter viewing area / ≦1/2 t ≦ a / Crack can't exceed the half of SP width. / 1/2 t < Z ≦2 t	Minor

◆Specification For TFT-LCD Module 3.5″ ~10″ : (Ver.B01)

NO	Item	Criterion	Level
08	The crack of glass	Symbols : X : The length of crack Y : The width of crack. Z : The thickness of crack W : terminal length t : The thickness of glass a : LCD side length 8.1.2 Corner crack : 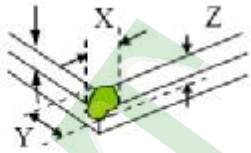	Minor

X	Y	Z
≦1/5 a	Crack can't enter viewing area	Z ≦ 1/2 t
≦1/5 a	Crack can't exceed the half of SP width.	1/2 t < Z ≦ 2 t

8.2 Protrusion over terminal :

8.2.1 Chip on electrode pad :

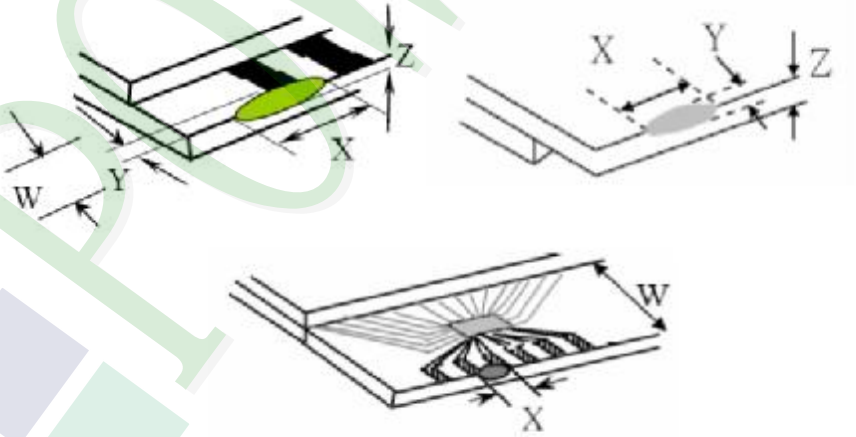

	X	Y	Z
Front	≦ a	≦ 1/2 W	≦ t
Back	≦ a	≦ W	≦ 1/2 t

◆Specification For TFT-LCD Module 3.5″ ~10″ : (Ver.B01)

NO	Item	Criterion	Level
08	The crack of glass	Symbols : X : The length of crack — Y : The width of crack. Z : The thickness of crack — W : terminal length t : The thickness of glass — a : LCD side length 8.2.2 Non-conductive portion : 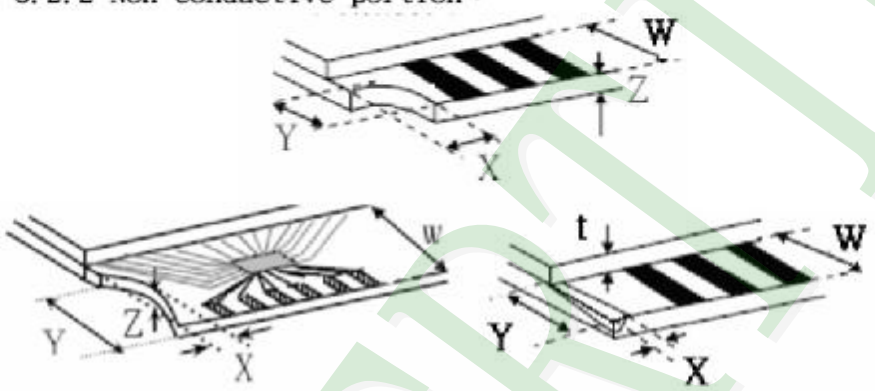 X: ≦1/3 a; Y: ≦W; Z: ≦t ⊙ If the chipped area touches the ITO terminal, over 2/3 of the ITO must remain and be inspected according to electrode terminal specifications. 8.2.3 Glass remain : 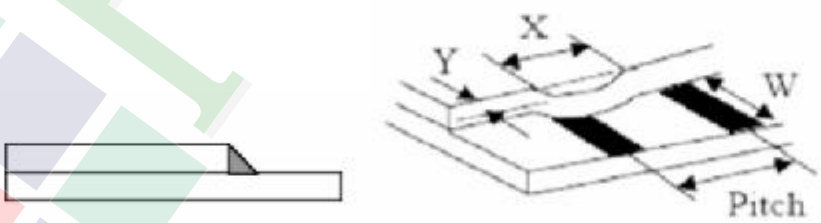 X: ≦a; Y: ≦1/3 W; Z: ≦t	Minor

4. RELIABILITY TEST

4.1 Reliability Test Condition

(Ver.B01)

NO.	TEST ITEM	TEST CONDITION
1	High Temperature Storage Test	Keep in +80 ±2℃ 96 hrs Surrounding temperature, then storage at normal condition 4hrs.
2	Low Temperature Storage Test	Keep in -30 ±2℃ 96 hrs Surrounding temperature, then storage at normal condition 4hrs.
3	High Temperature / High Humidity Storage Test	Keep in +60℃ / 90% R.H duration for 96 hrs Surrounding temperature, then storage at normal condition 4hrs. (Excluding the polarizer)
4	Temperature Cycling Storage Test	-30℃ → +25℃ → +80℃ → +25℃ (30mins) (5mins) (30mins) (5mins) 10 Cycle Surrounding temperature, then storage at normal condition 4hrs.
5	ESD Test	Air Discharge: Apply 2 KV with 5 times Discharge for each polarity +/- Contact Discharge: Apply 250 V with 5 times discharge for each polarity +/- 1. Temperature ambiance : 15℃～35℃ 2. Humidity relative : 30%～60% 3. Energy Storage Capacitance(Cs+Cd) : 150pF±10% 4. Discharge Resistance(Rd) : 330Ω±10% 5. Discharge, mode of operation : Single Discharge (time between successive discharges at least 1 sec) (Tolerance if the output voltage indication : ±5%)
6	Vibration Test (Packaged)	1. Sine wave 10～55 Hz frequency (1 min) 2. The amplitude of vibration :1.5 mm 3. Each direction (X、Y、Z) duration for 2 Hrs
7	Drop Test (Packaged)	Packing Weight (Kg) / Drop Height (cm) 0 ~ 45.4 / 122 45.4 ~ 90.8 / 76 90.8 ~ 454 / 61 Over 454 / 46 Drop direction :※1 corner / 3 edges / 6 sides each 1times

5. PRECAUTION RELATING PRODUCT HANDLING

5.1 SAFETY

5.1.1 If the LCD panel breaks , be careful not to get the liquid crystal to touch your skin.

5.1.2 If the liquid crystal touches your skin or clothes , please wash it off immediately by using soap and water.

5.2 HANDLING

5.2.1 Avoid any strong mechanical shock which can break the glass.

5.2.2 Avoid static electricity which can damage the CMOS LSI—When working with the module , be sure to ground your body and any electrical equipment you may be using.

5.2.3 Do not remove the panel or frame from the module.

5.2.4 The polarizing plate of the display is very fragile. So , please handle it very carefully ,do not touch , push or rub the exposed polarizing with anything harder than an HB pencil lead (glass , tweezers , etc.)

5.2.5 Do not wipe the polarizing plate with a dry cloth , as it may easily scratch the surface of plate.

5.2.6 Do not touch the display area with bare hands , this will stain the display area.

5.2.7 Do not use ketonics solvent & aromatic solvent. Use with a soft cloth soaked with a cleaning naphtha solvent.

5.2.8 To control temperature and time of soldering is 320±10℃and 3-5 sec.

5.2.9 To avoid liquid (include organic solvent) stained on LCM .

5.3 STORAGE

5.3.1 Store the panel or module in a dark place where the temperature is 25℃ ±5℃ and the humidity is below 65% RH.

5.3.2 Do not place the module near organics solvents or corrosive gases.

5.3.3 Do not crush , shake , or jolt the module.

5.4 TERMS OF WARRANTY

5.4.1 Applicable warrant period

The period is within thirteen months since the date of shipping out under normal using and storage conditions.

5.4.2 Unaccepted responsibility

This product has been manufactured to your company's specification as a part for use in your company's general electronic products. It is guaranteed to perform according to delivery specifications. For any other use apart from general electronic equipment , we cannot take responsibility if the product is used in nuclear power control equipment , aerospace equipment , fire and security systems or any other applications in which there is a direct risk to human life and where extremely high levels of reliability are required.

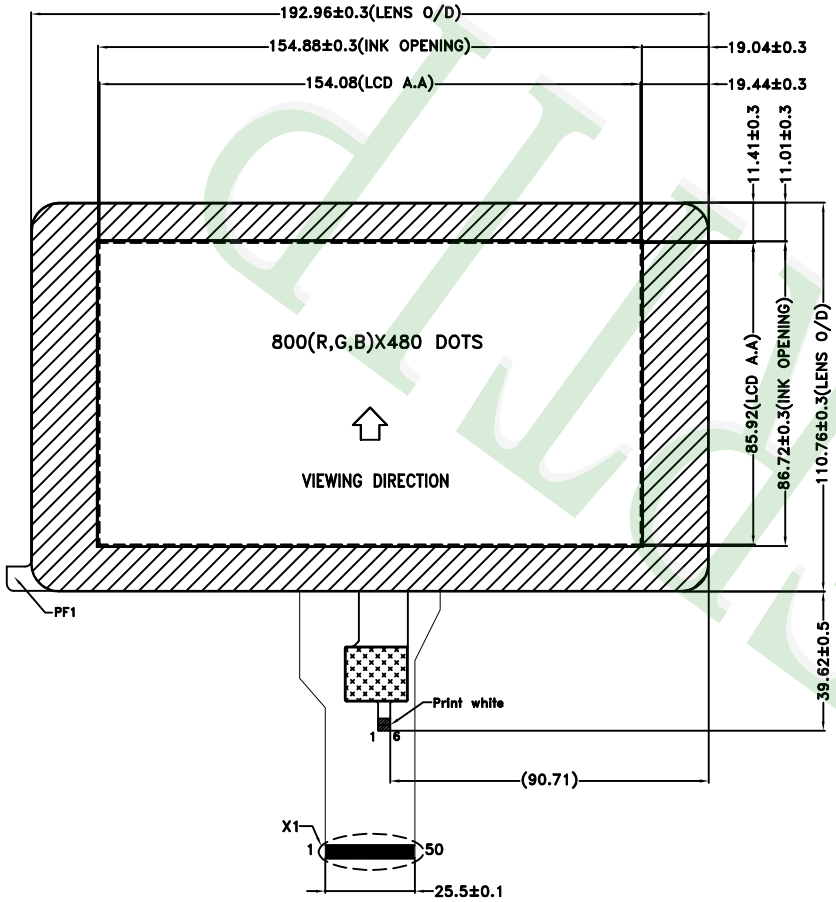

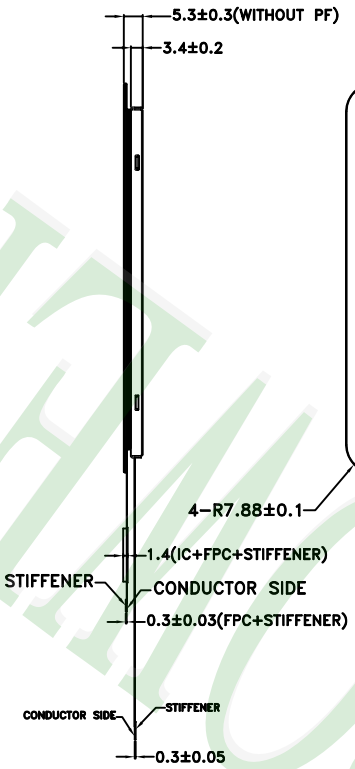

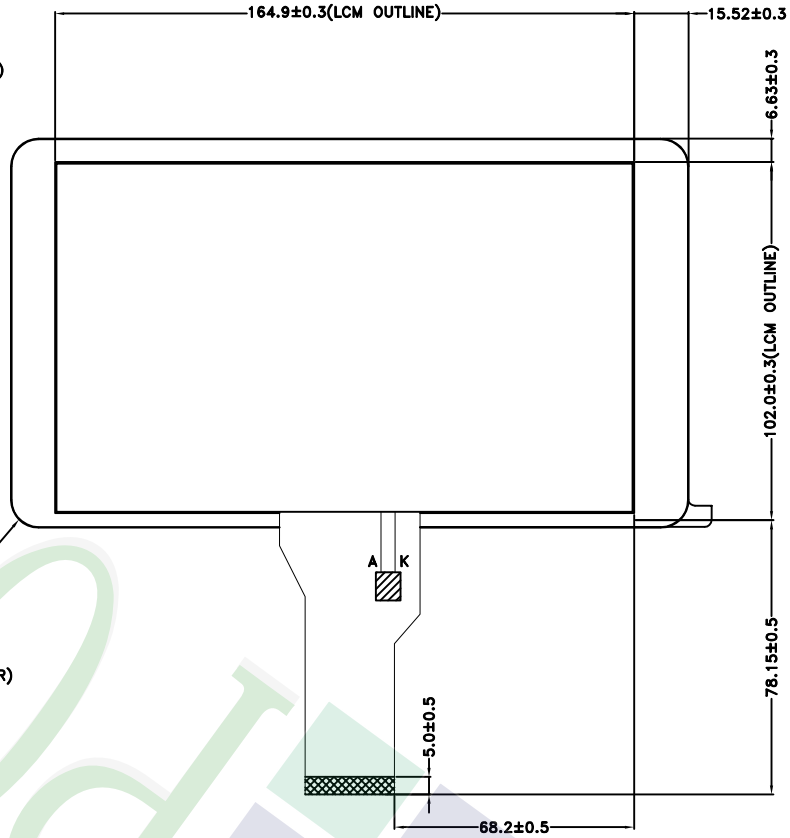

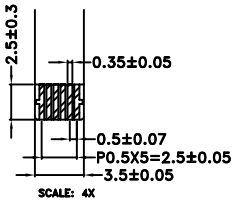

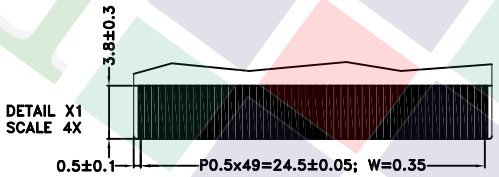

NOTES:
1. LCD TYPE: TFT LCD
2. LCD DISPLAY: POSITIVE/TRANSMISSIVE
3. VIEW DIRECTION: 6 O'CLOCK
4. The tolerance unless classified ±0.2mm
5. FPC suggested connector : HIROSE FH12A-50S-0.5H or compatible
6. TP FPC suggested connector : HIROSE FH12A-06S-0.5H or compatible

TP Pin	Name
1	GND
2	VDD
3	SCL
4	SDA
5	INT
6	RESET

REV	REV BY	REVISER	DATE
007			
006			
005			
004			
003			
002			
001	NEW DRAWING	Sally	2016/07/13

PART NO: PH800480T013-IBC06

DRAWING NAME : JLMD-PH800480T013-IBC06

TITLE: LCD MODULE DRAWING

久 正 光 電 股 份 有 限 公 司
POWERTIP TECHNOLOGY CORPORATION

Design	Sally	(3)	Surface
Check	Terry	Unit	MM
		Material	
Scale	1:1	Thickness	
Approve	Ryan	Page	1/1
		Quantity	

Tolerance / Precision / Length(Mm) (mm)	Precision Level
1 ~ 4	-
4 ~ 16	-
16 ~ 63	-
63 ~ 250	-
250 ~ 1000	-

PT-A-054-01

Ver.001

Documents NO.	JPKG-PH800480T013-IBC06

LCM包裝規格書
LCM Packaging Specifications (For Tray)

Approve	Check	Contact
Ryan	Terry	Sally

1.包裝材料規格表 (Packaging Material) : (per carton)

No.	Item	Model	Dimensions (mm)	1Pcs Weight	Quantity	Total Weight
1	成品 (LCM)	PH800480T013-IBC06	192.96 X 110.76 X 5.3	0.179	72	12.888
2	多層薄膜(1)POF	OTFILM0BA03ABA	19"X350X0.015	——	6	——
3	TRAY 盤 (2)Tray	TY00000000375	352 X 260 X 14.0	0.1	42	4.2
4	內盒(3)Product Box	BX36627063ABBA	383 X 270 X 66	0.182	6	1.092
5	保利龍板(4)Polylon board	OTPLB00PL08ABA	550 X 393 X 20	0.0284	2	0.0568
6	外紙箱(5)Carton	BX57041027CCBA	570 X 410 X 265	1.0	1	1.0
7						
8						
9						

2.一 整箱總重量 (Total LCD Weight in carton) : 19.24 Kg±10%

3.單箱數量規格表 (Packaging Specifications and Quantity) :

(1)LCM quantity per box : no per tray	2	x no of tray	6	=	12
(2)Total LCM quantity in carton : quantity per box	12	x no of boxes	6	=	72

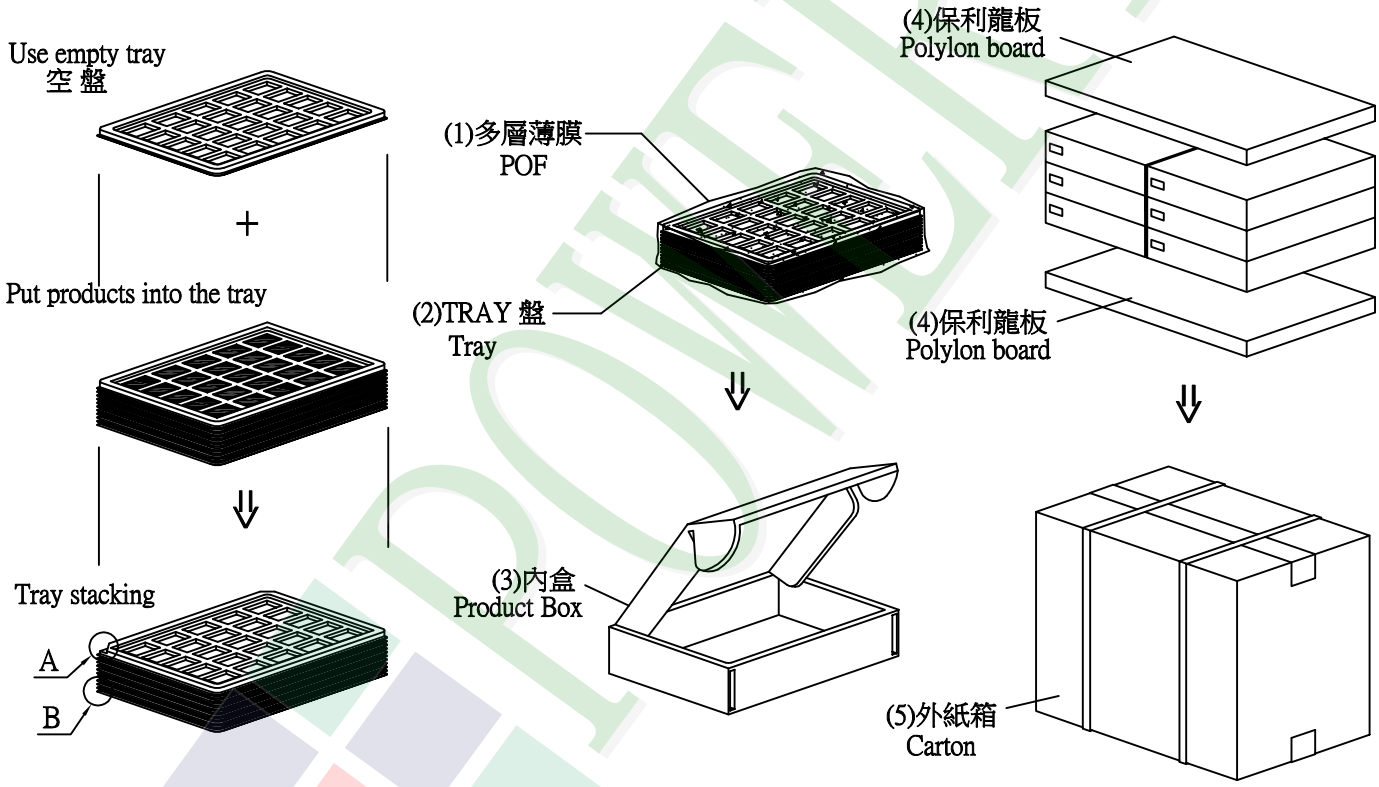

特 記 事 項 (REMARK)

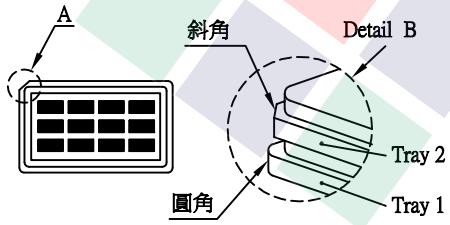

4.TRAY盤相疊時,需旋轉180度,請詳見B視圖
Rotate tray 180 degrees and place on top of stack.
Check the tray stack using Fig. B.