Block diagram

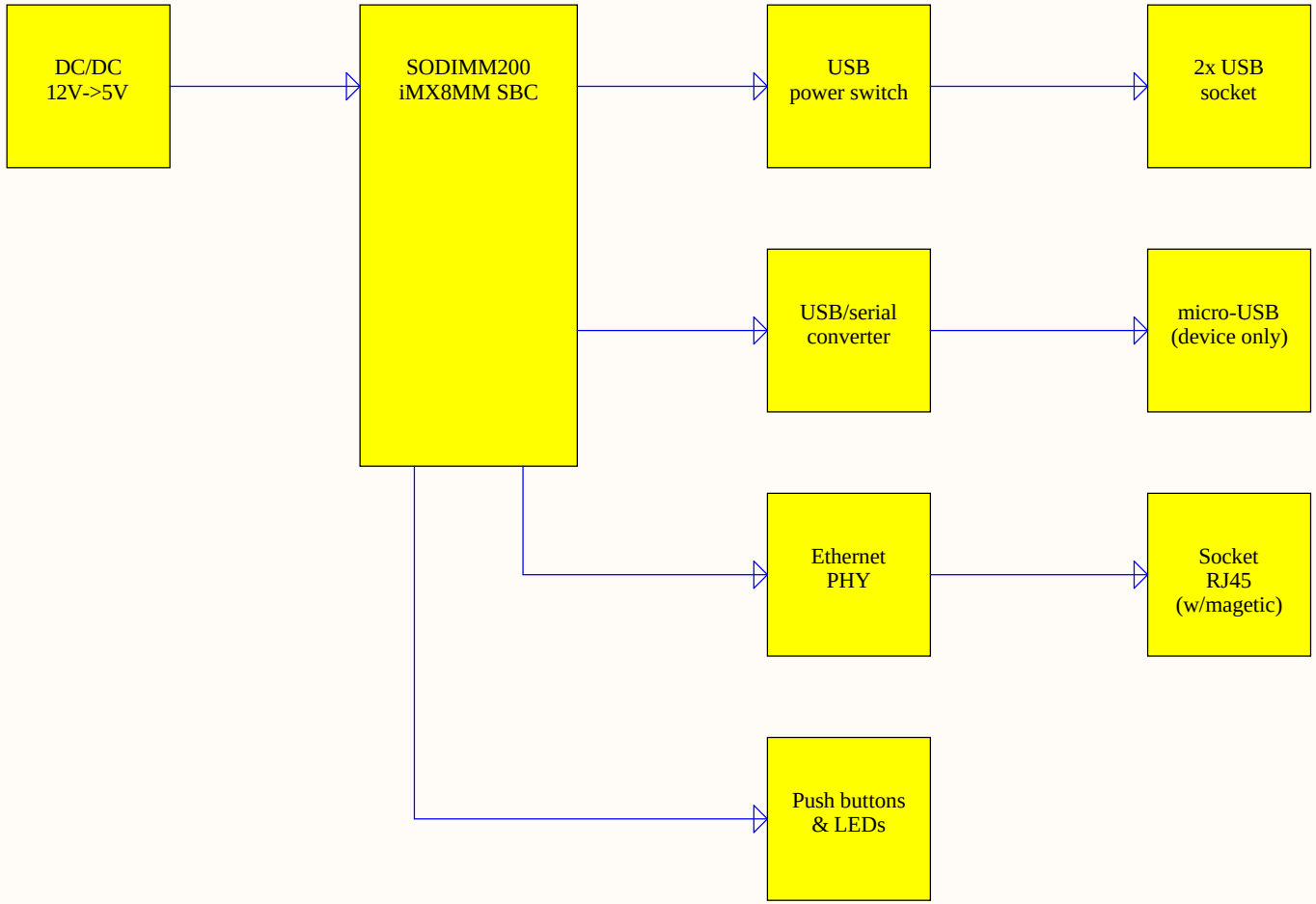

U_02_PowerTree
02_PowerTree.SchDoc

Title		
Size A3	Number	Revision
Date: 3.15.2023		Sheet of
File: D:\Projekty\..\01_BlockDiagram.SchDoc		Drawn By:

VisionSOM-8MP top level sheet

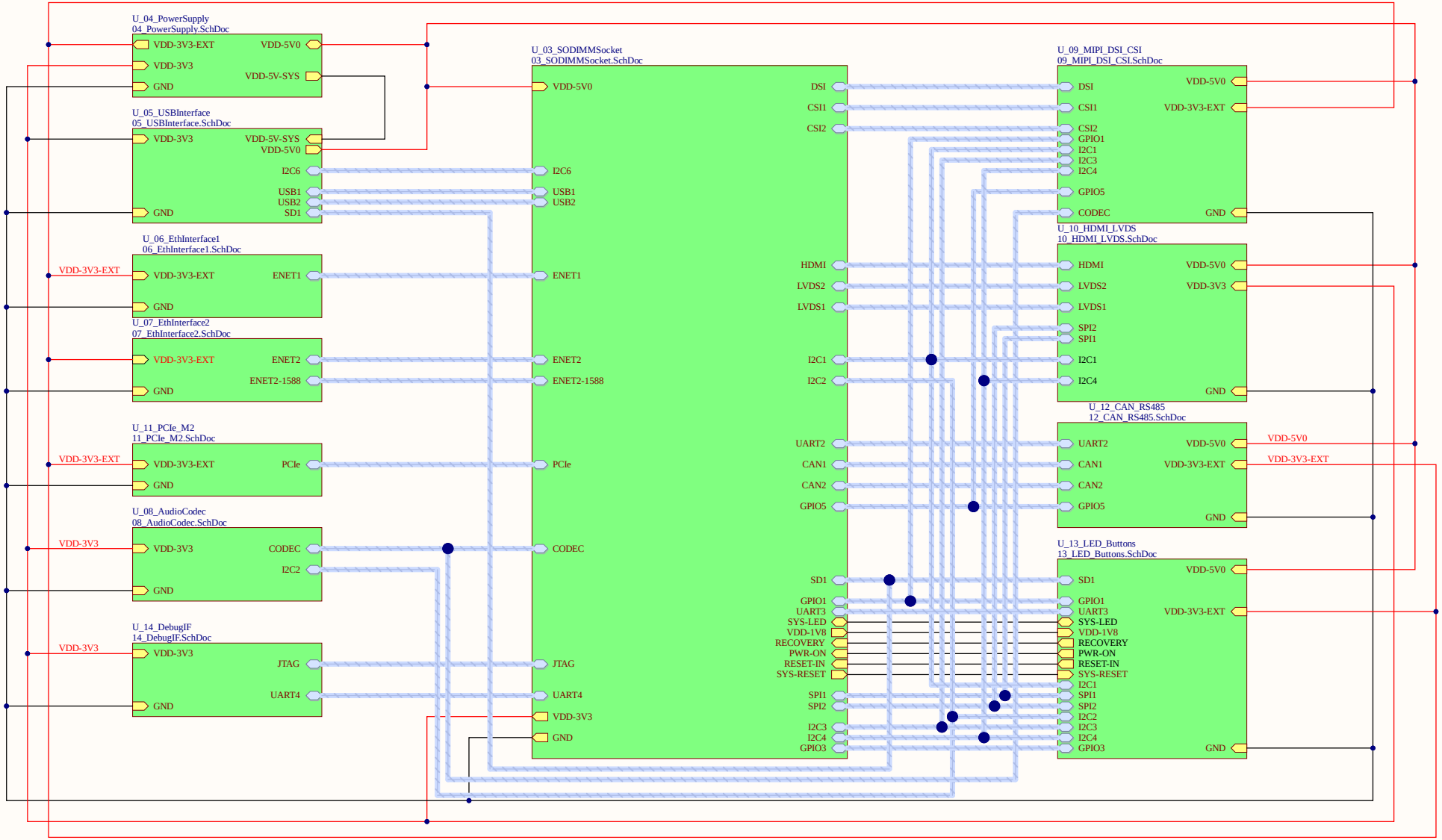

Title		
Size A3	Number	Revision
Date: 3.15.2023		Sheet of
File: D:\Projekty\..\02_PowerTree.SchDoc		Drawn By:

SODIMM connector

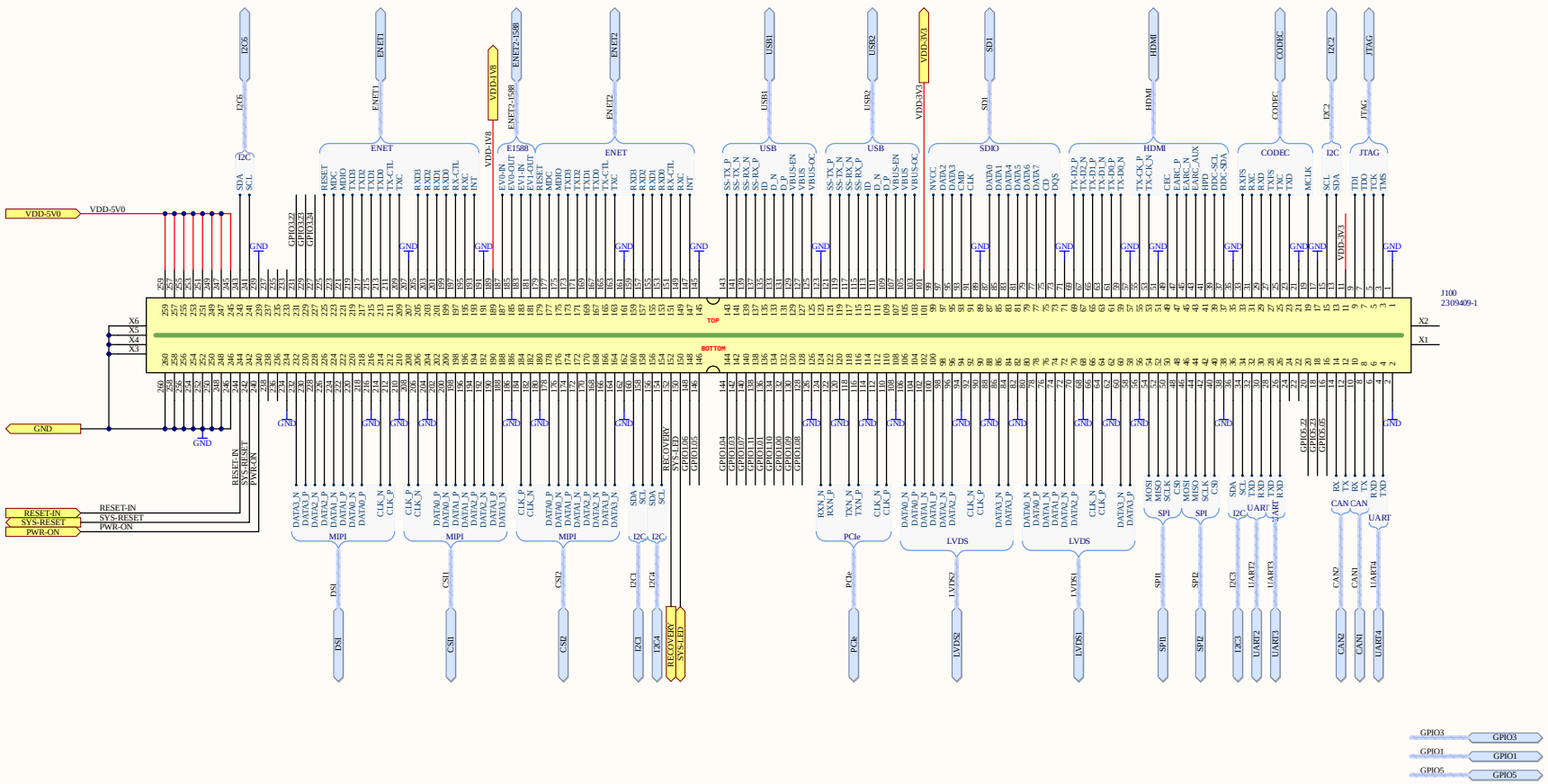

Power supply - DC/DC converter

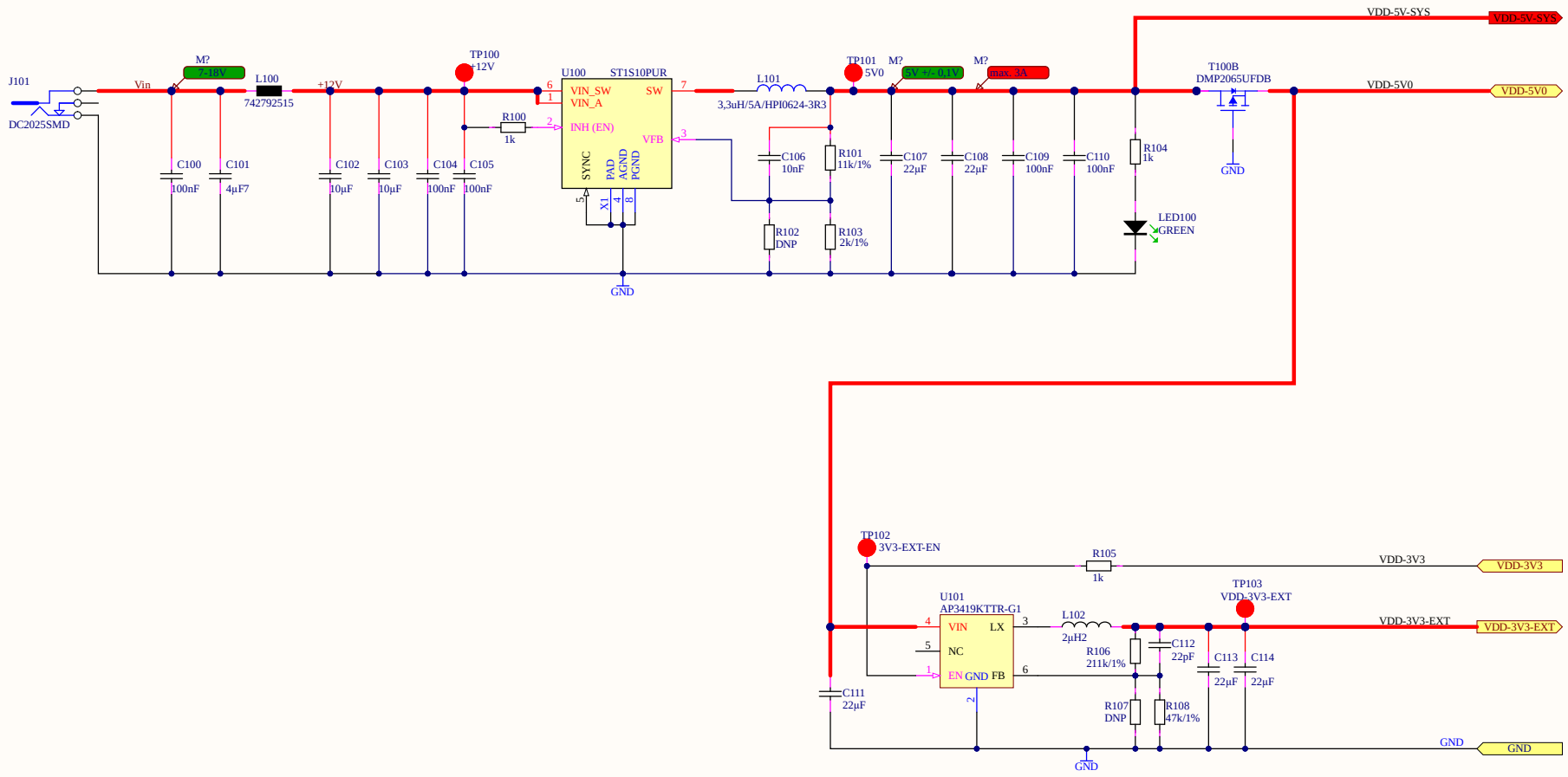

Title		
Size A3	Number	Revision
Date: 3.15.2023	Sheet of	
File: D:\Projekty\..\04_PowerSupply.SchDoc	Drawn By:	

USB interfaces

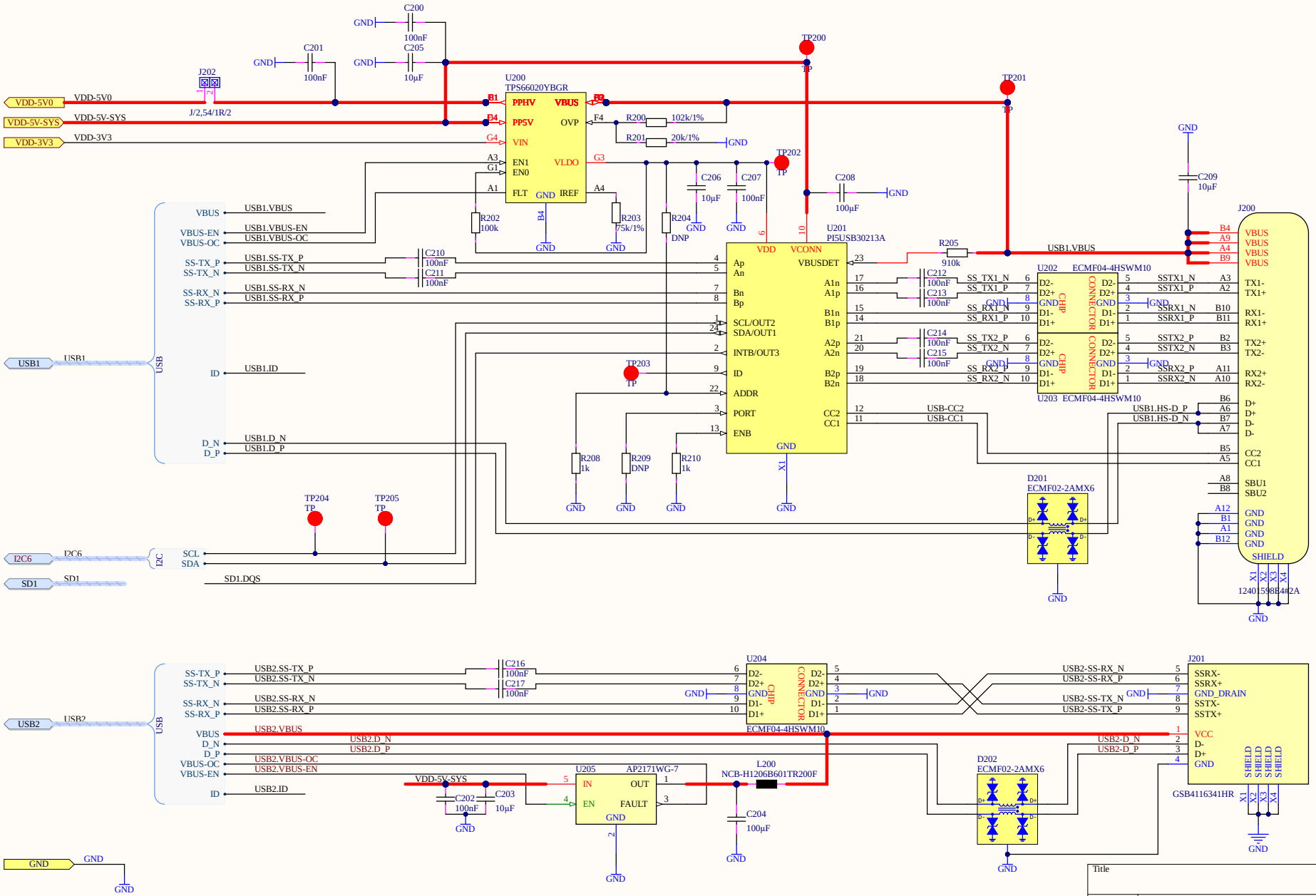

Title		
Size A3	Number	Revision
Date: 3.15.2023	Sheet of	
File: D:\Projekty\..\05_USBInterface.SchDoc	Drawn By:	

Gigabit Ethernet 1

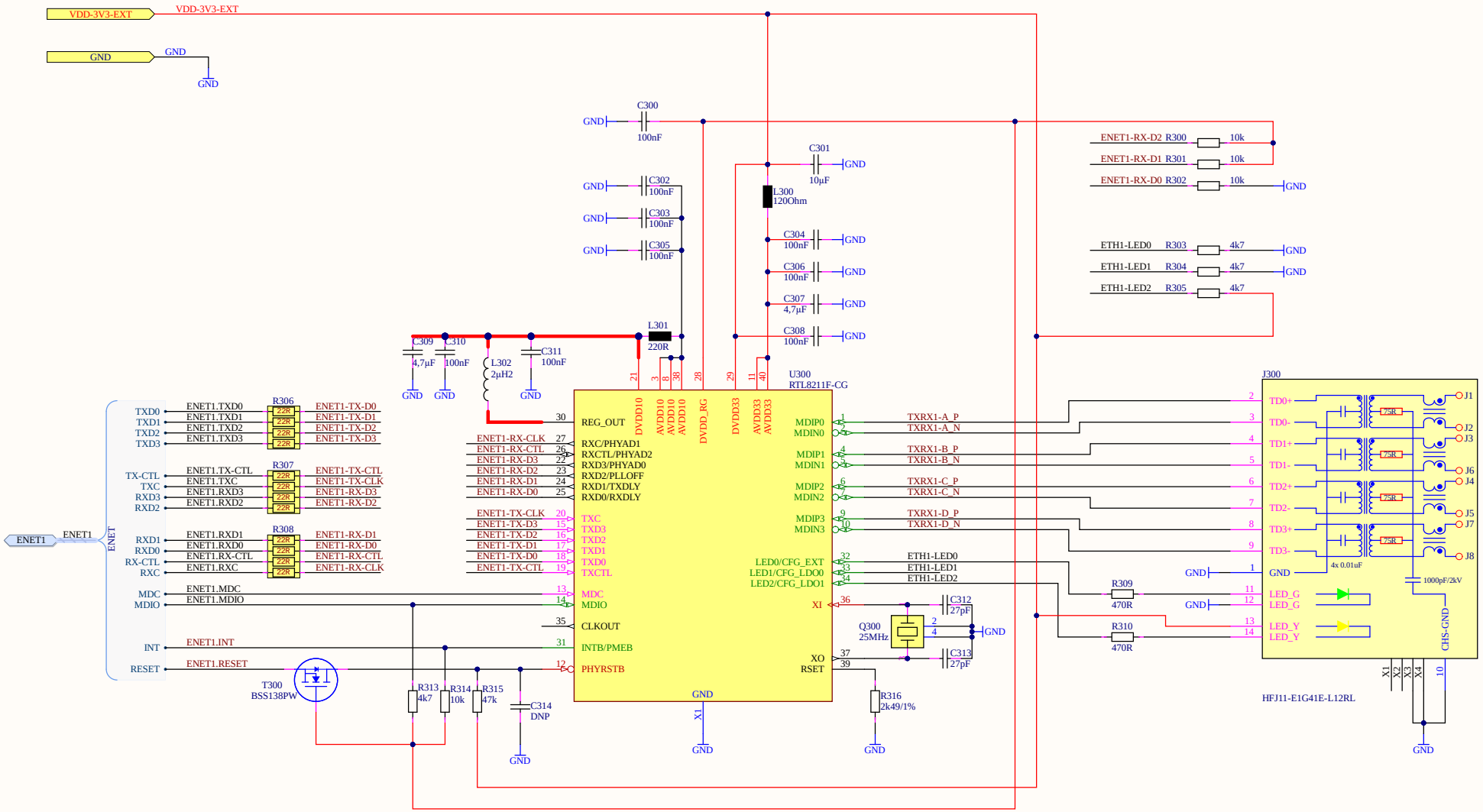

Title		
Size A3	Number	Revision
Date: 3.15.2023	Sheet of	
File: D:\Projekty\..\06_EthInterface1.SchDoc	Drawn By:	

Gigabit Ethernet 2

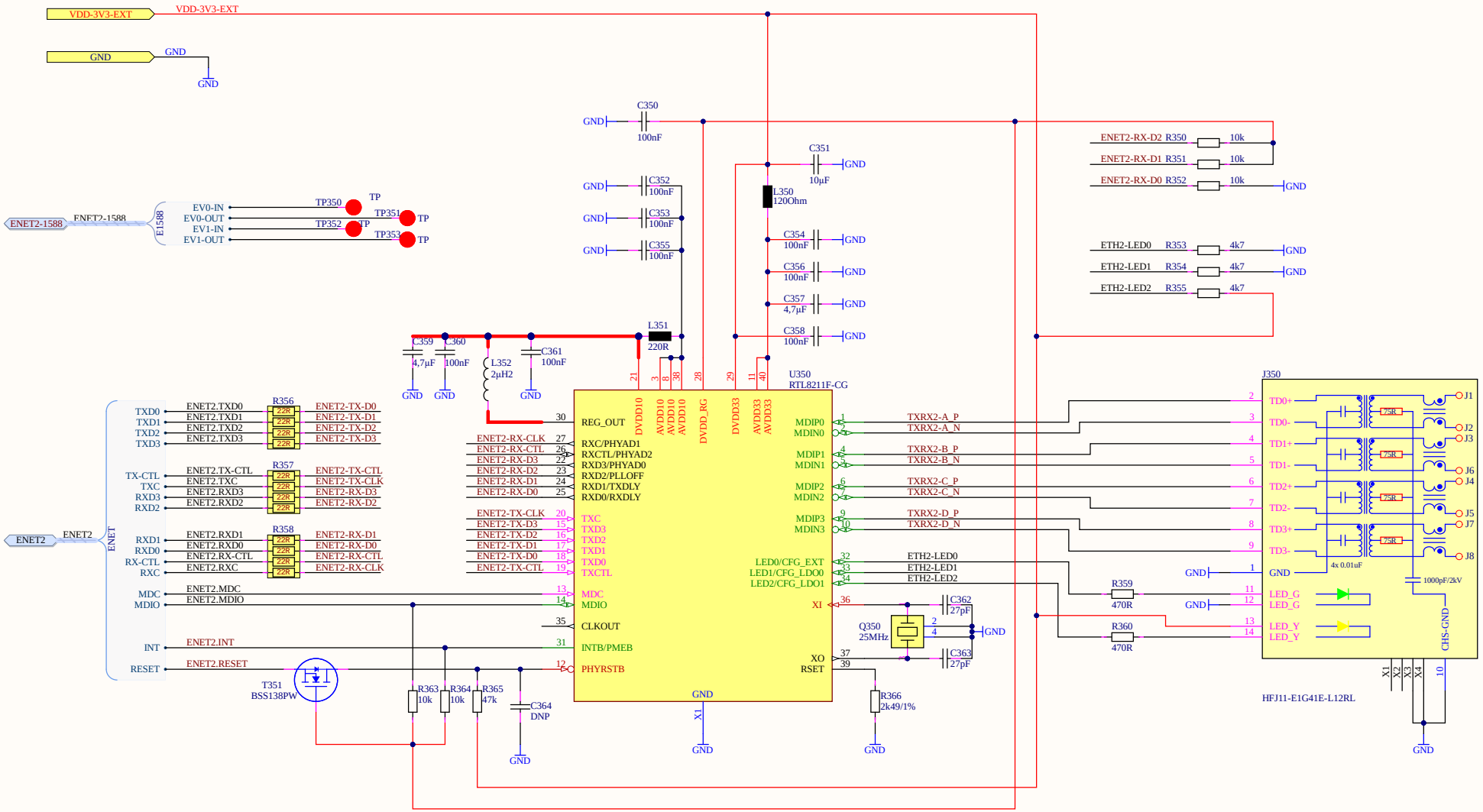

Title		
Size A3	Number	Revision
Date: 3.15.2023	Sheet of	
File: D:\Projekty\..\07_EthInterface2.SchDoc	Drawn By:	

AUDIO-CODEC

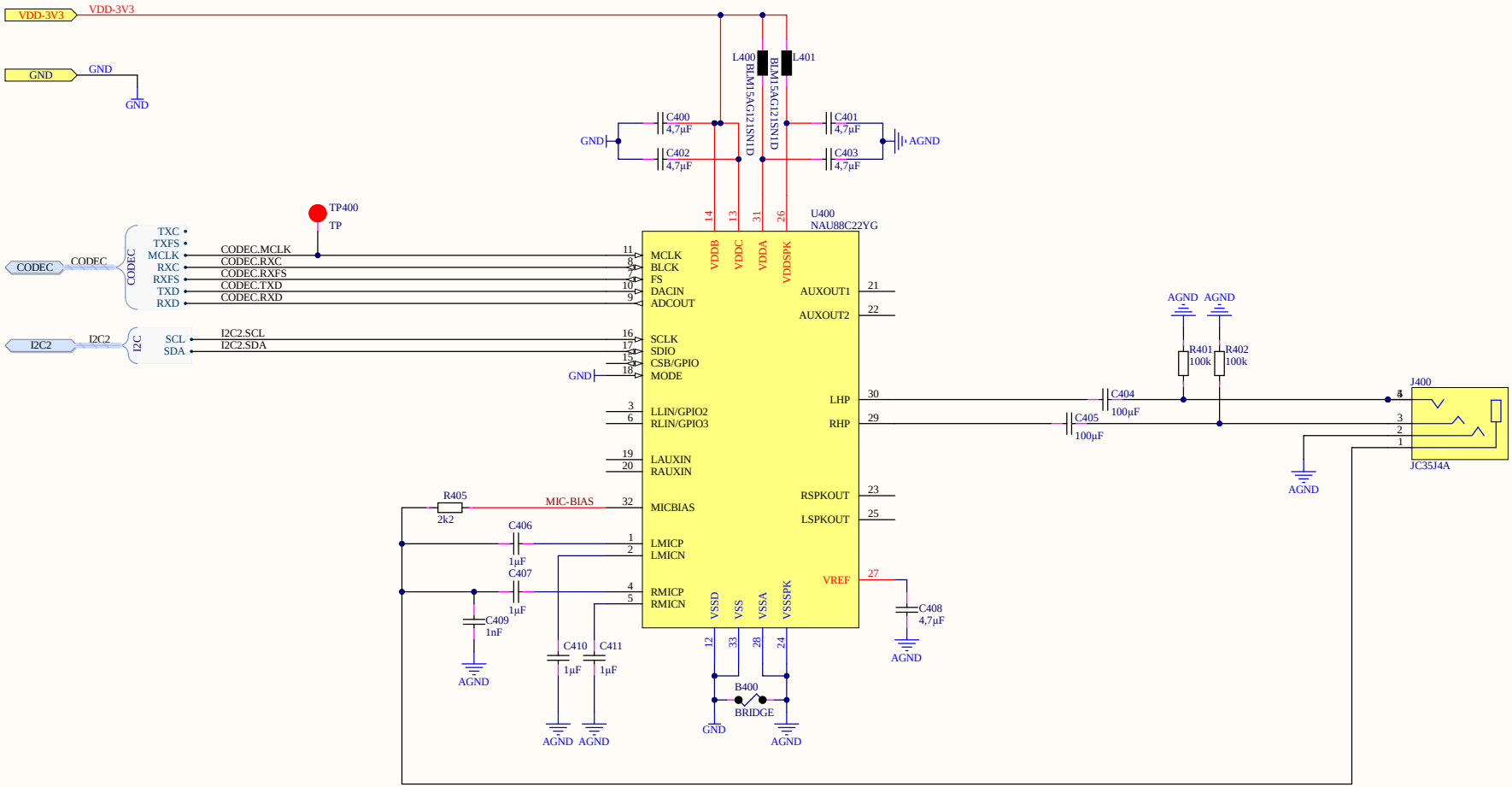

Title		
Size A3	Number	Revision
Date: 3.15.2023	Sheet of	
File: D:\Projekty\..\08_AudioCodec.SchDoc	Drawn By:	

MIPI Display/Camera IF

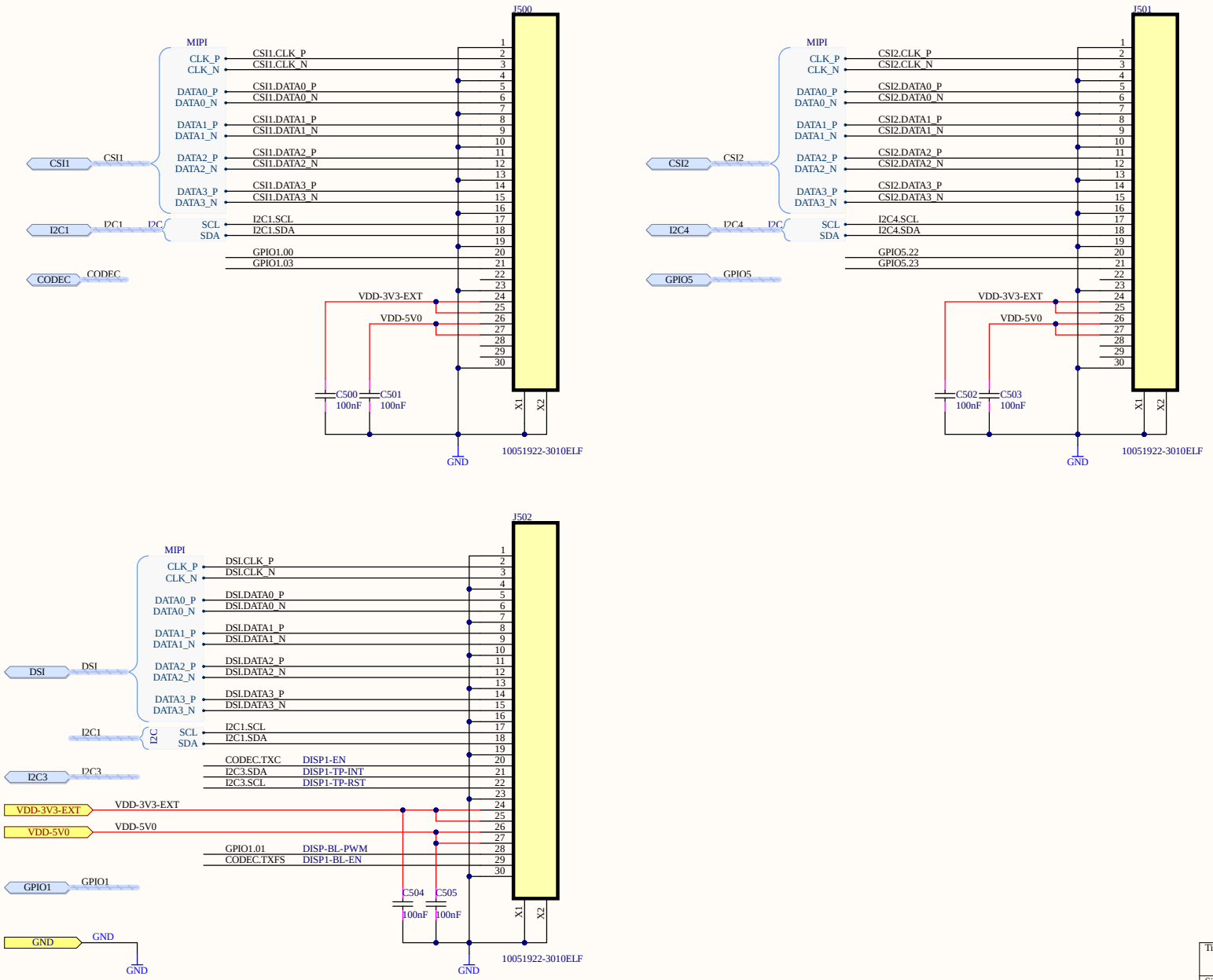

Title		
Size A3	Number	Revision
Date: 3.15.2023	Sheet of	
File: D:\Projekty\..\09_MIPI_DSI_CSI.SchDoc	Drawn By:	

HDMI/LVDS display IF

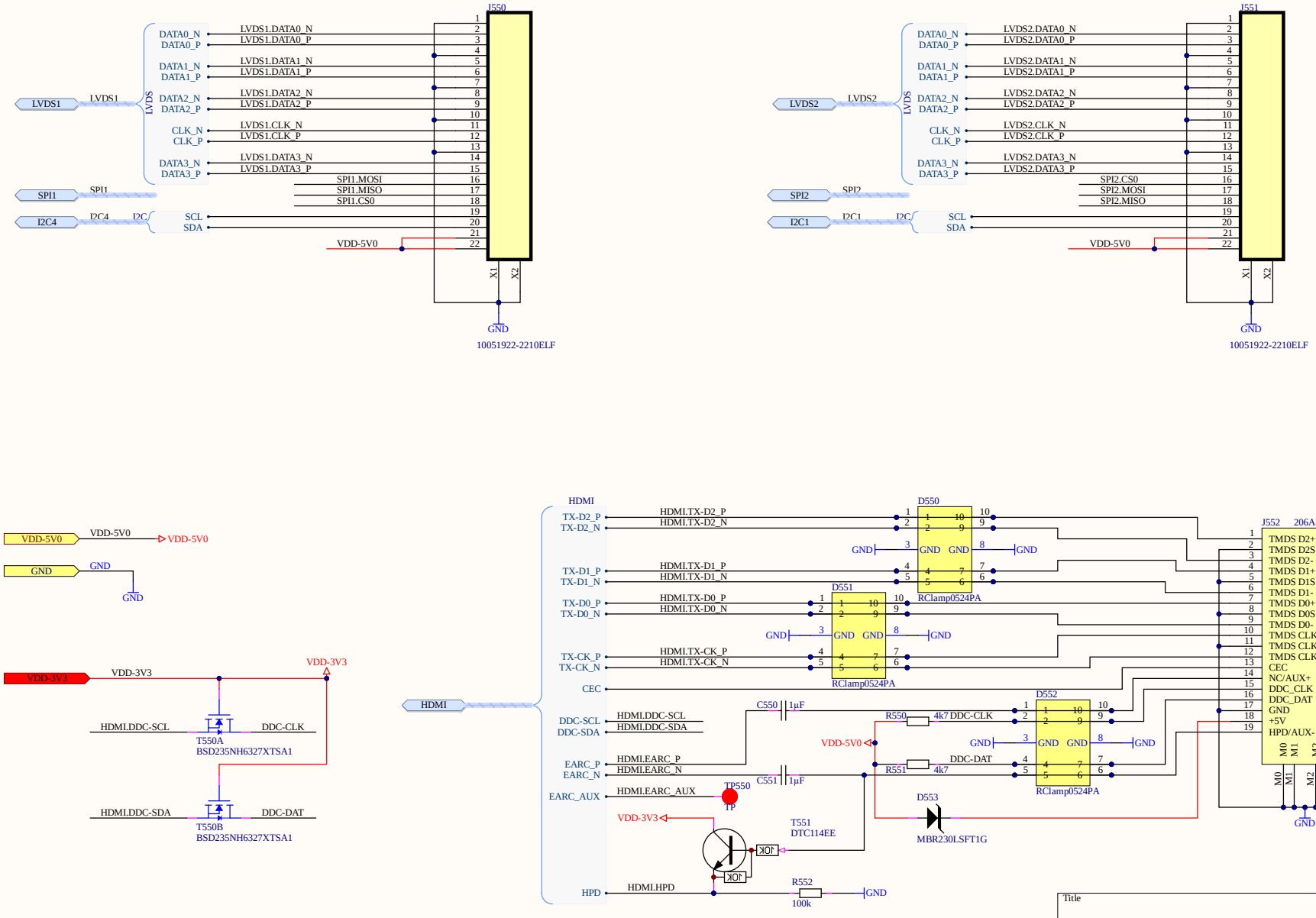

Title		
Size A3	Number	Revision
Date: 3.15.2023	Sheet of	
File: D:\Projekty\..\10_HDMI_LVDS.SchDoc	Drawn By:	

M.2 PCI-e interface

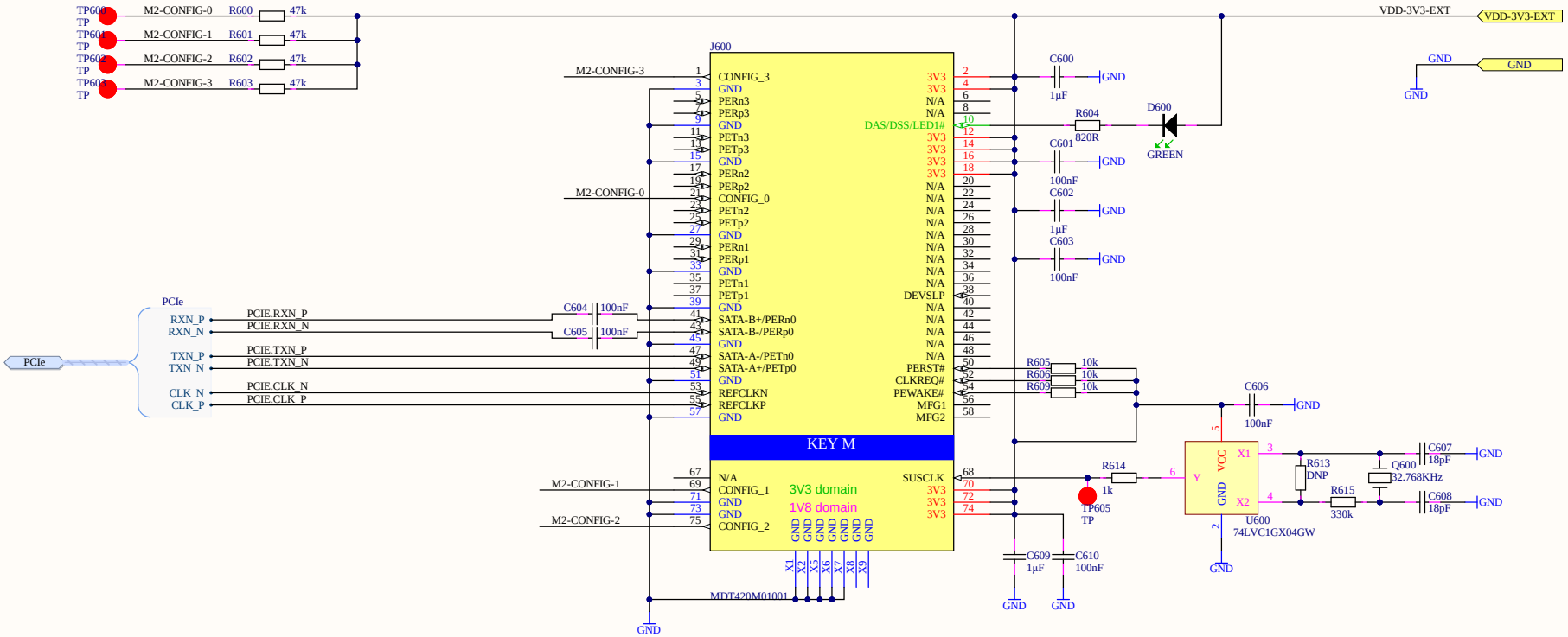

Title		
Size A3	Number	Revision
Date: 3.15.2023		Sheet of
File: D:\Projekty\..\11_PCIe_M2.SchDoc		Drawn By:

CAN/RS485 IF

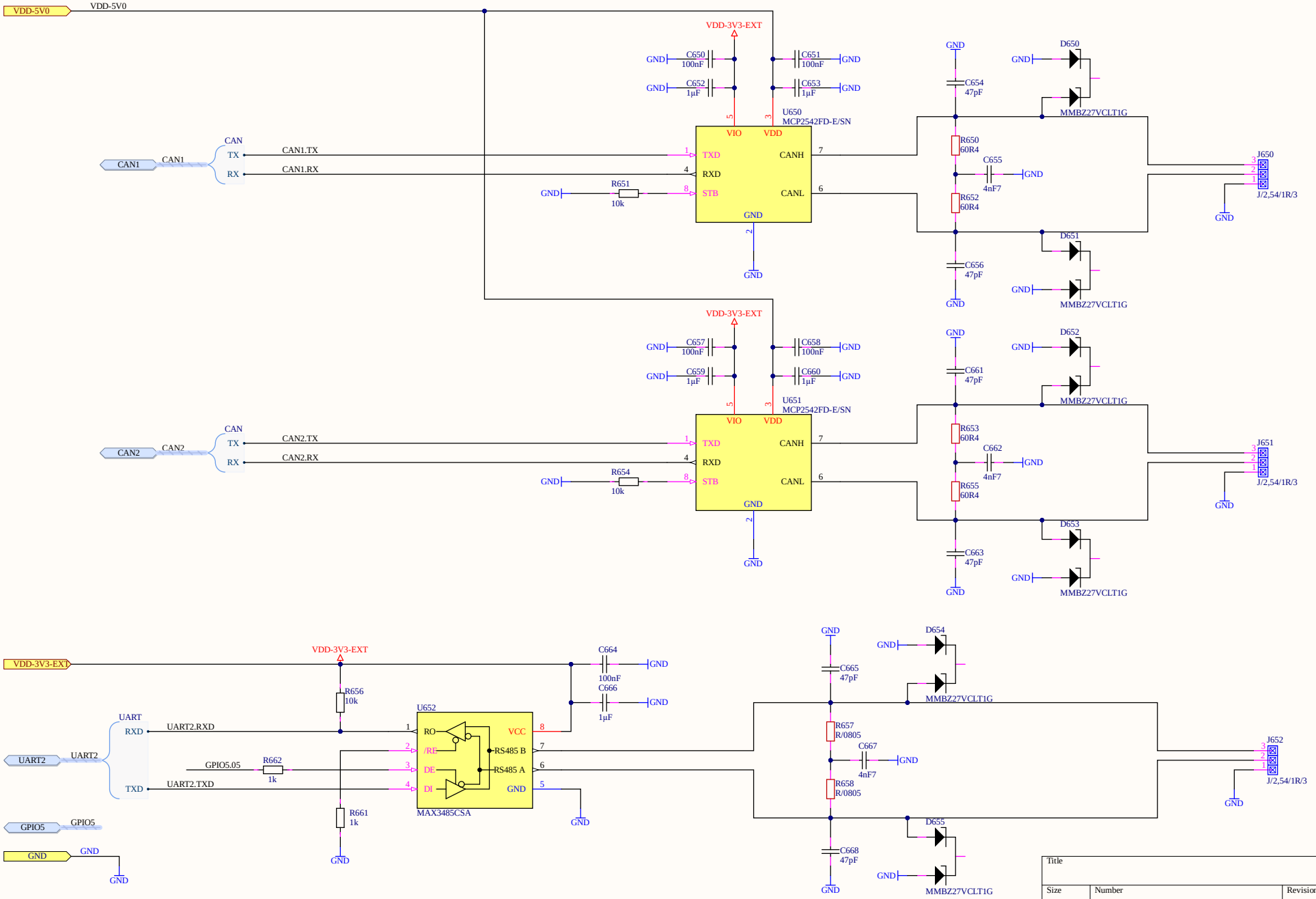

Title		
Size A3	Number	Revision
Date: 3.15.2023		Sheet of
File: D:\Projekty\..\12_CAN_RS485.SchDoc		Drawn By:

LEDs, Buttons & GPIO

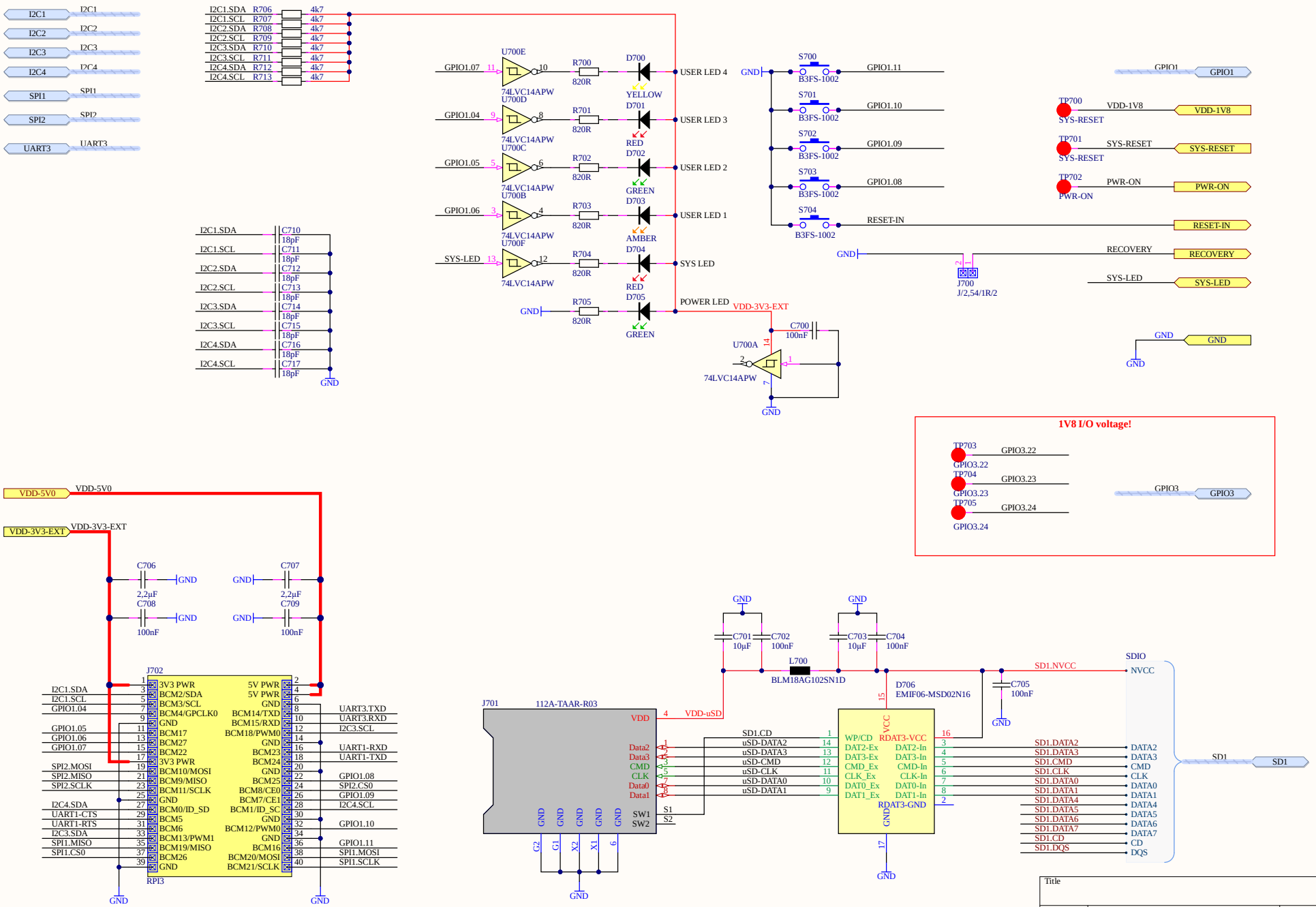

Title		
Size A3	Number	Revision
Date: 3.15.2023	Sheet of	
File: D:\Projekty\..\13_LED_Buttons.SchDoc	Drawn By:	

Segger J-Link OB

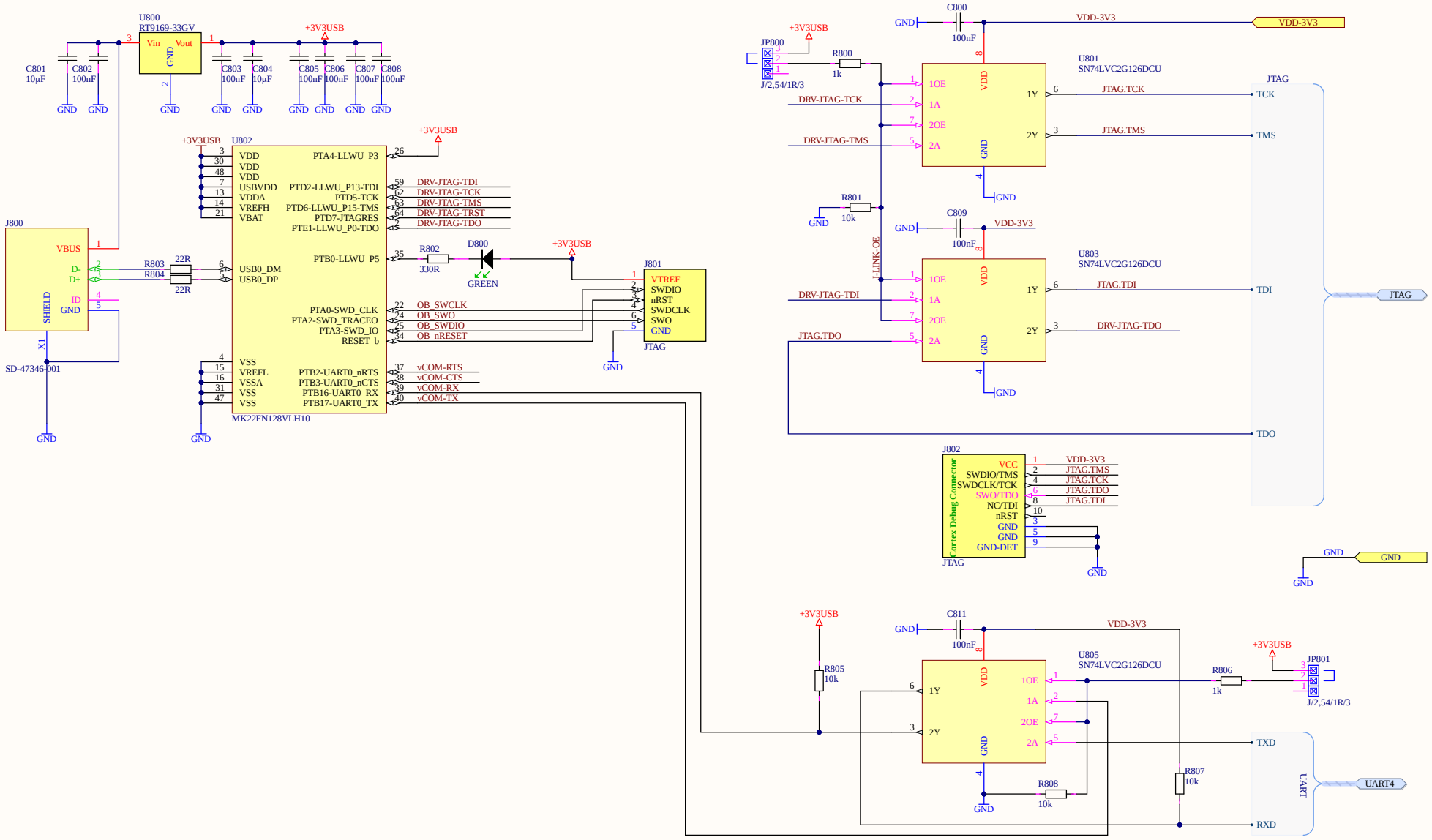

Title		
Size A3	Number	Revision
Date: 3.15.2023		Sheet of
File: D:\Projekty\..\14_DebugIF.SchDoc		Drawn By: