StarCB-8MPlus-ADV top level sheet

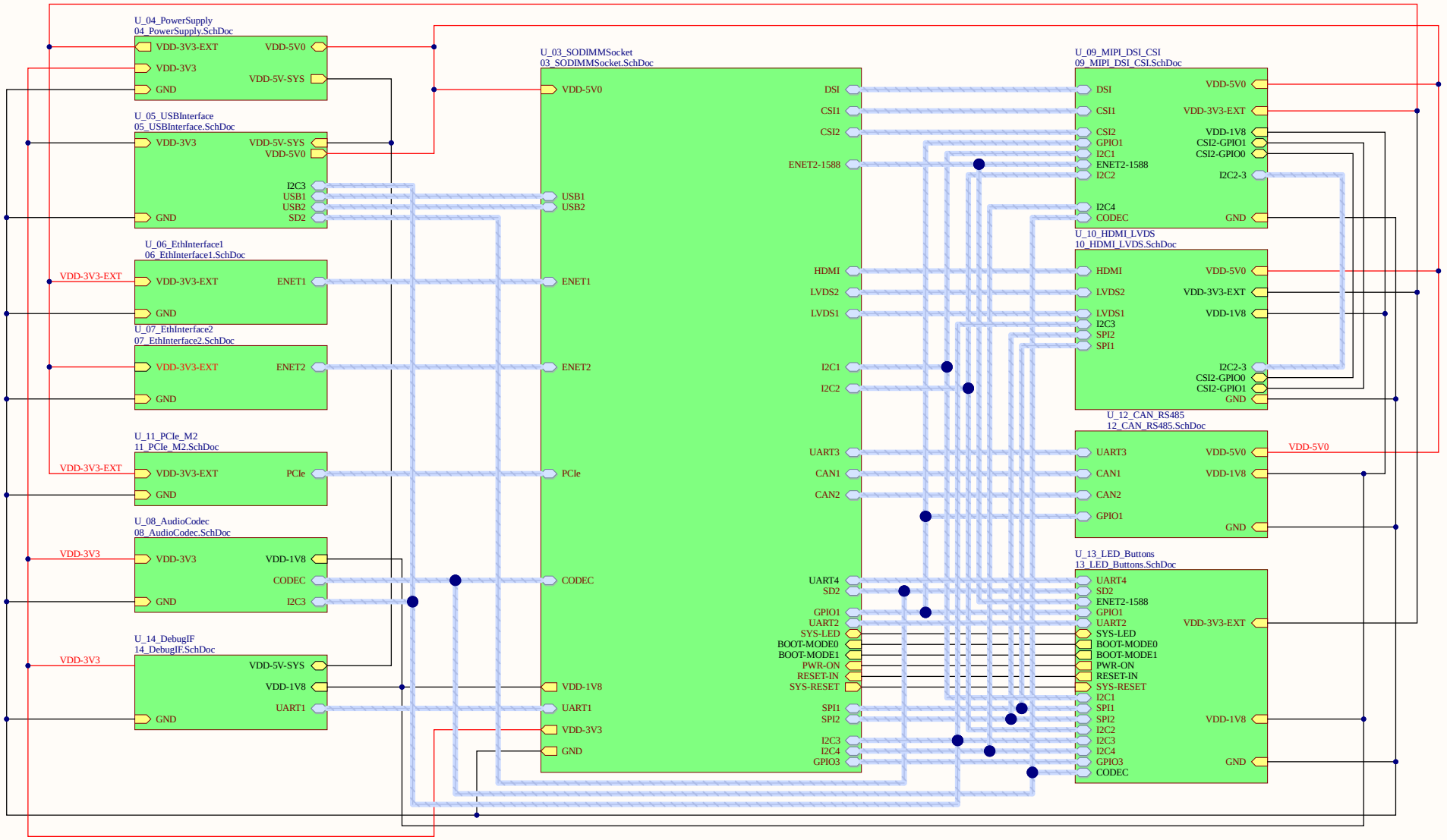

P1 FIDUCIAL P2 FIDUCIAL P3 FIDUCIAL P4 FIDUCIAL

Title	StarCB-8Mplus-ADV	SoMLabs
Size: A3	Number:	Revision: v1.1
Date: 11.26.2026		Sheet of
File: D:\Projekty\..\02_PowerTree.SchDoc		Drawn By: SoMLabs

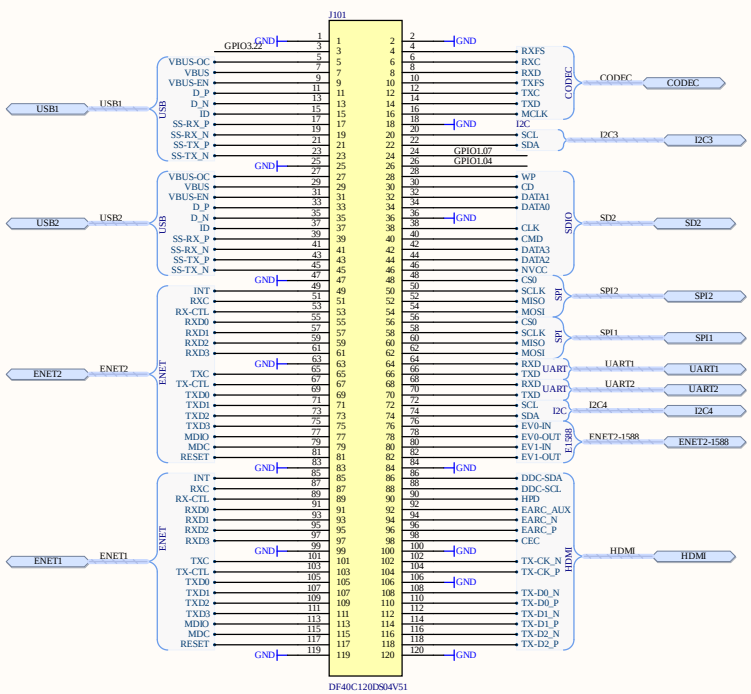
J101
GPIO3.22
GND
USB1
USB2
ENET2
ENET1
VBUS-OC
VBUS
VBUS-EN
D_P
D_N
ID
SS-RX_P
SS-RX_N
SS-TX_P
SS-TX_N
INT
RXC
RX-CTL
RXD0
RXD1
RXD2
RXD3
TXC
TX-CTL
TXD0
TXD1
TXD2
TXD3
MDIO
MDC
RESET
RXFS
TXFS
TXC
TXD
MCLK
I2C
SCL
SDA
GPIO1.07
GPIO1.04
WP
CD
DATA1
DATA0
CLK
CMD
DATA3
DATA2
NVCC
CS0
SCLK
MISO
MOSI
EV0-IN
EV0-OUT
EV1-IN
EV1-OUT
DDC-SDA
DDC-SCL
HPD
EARC_AUX
EARC_N
EARC_P
CEC
TX-CK_N
TX-CK_P
TX-D0_N
TX-D0_P
TX-D1_N
TX-D1_P
TX-D2_N
TX-D2_P
CODEC
SDIO
SPI
UART
ENET
HDMI
DF40C120DS04V51

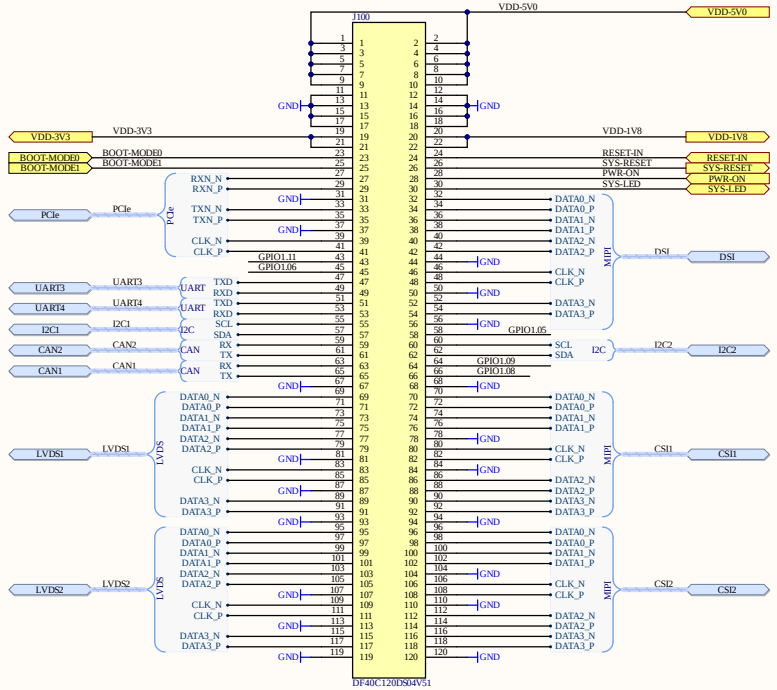
J100
VDD-5V0
VDD-3V3
VDD-1V8
BOOT-MODE0
BOOT-MODE1
RESET-IN
SYS-RESET
PWR-ON
SYS-LED
PCIe
UART3
UART4
I2C1
CAN2
CAN1
LVDS1
LVDS2
DSI
CSI1
CSI2
I2C2
GPIO1.11
GPIO1.06
GPIO1.05
GPIO1.09
GPIO1.08
GPIO3
GPIO1
DF40C120DS04V51


GND
GND
GND

Power supply - DC/DC converter

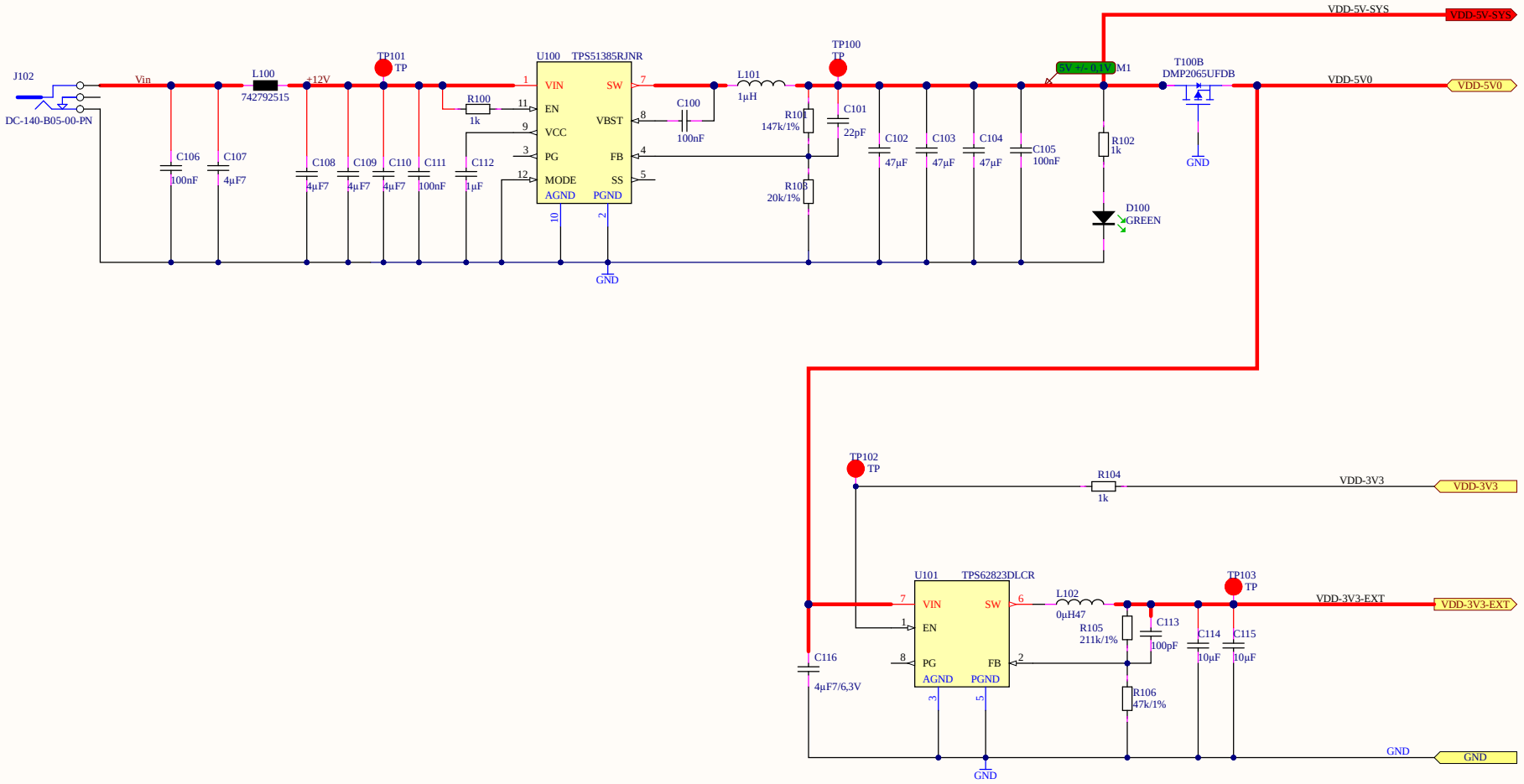

Title	StarCB-8Mplus-ADV	SoMLabs
Size: A3	Number:	Revision: v1.1
Date: 11.26.2026	Sheet of	
File: D:\Projekty\..\04_PowerSupply.SchDoc	Drawn By: SoMLabs	

USB interfaces

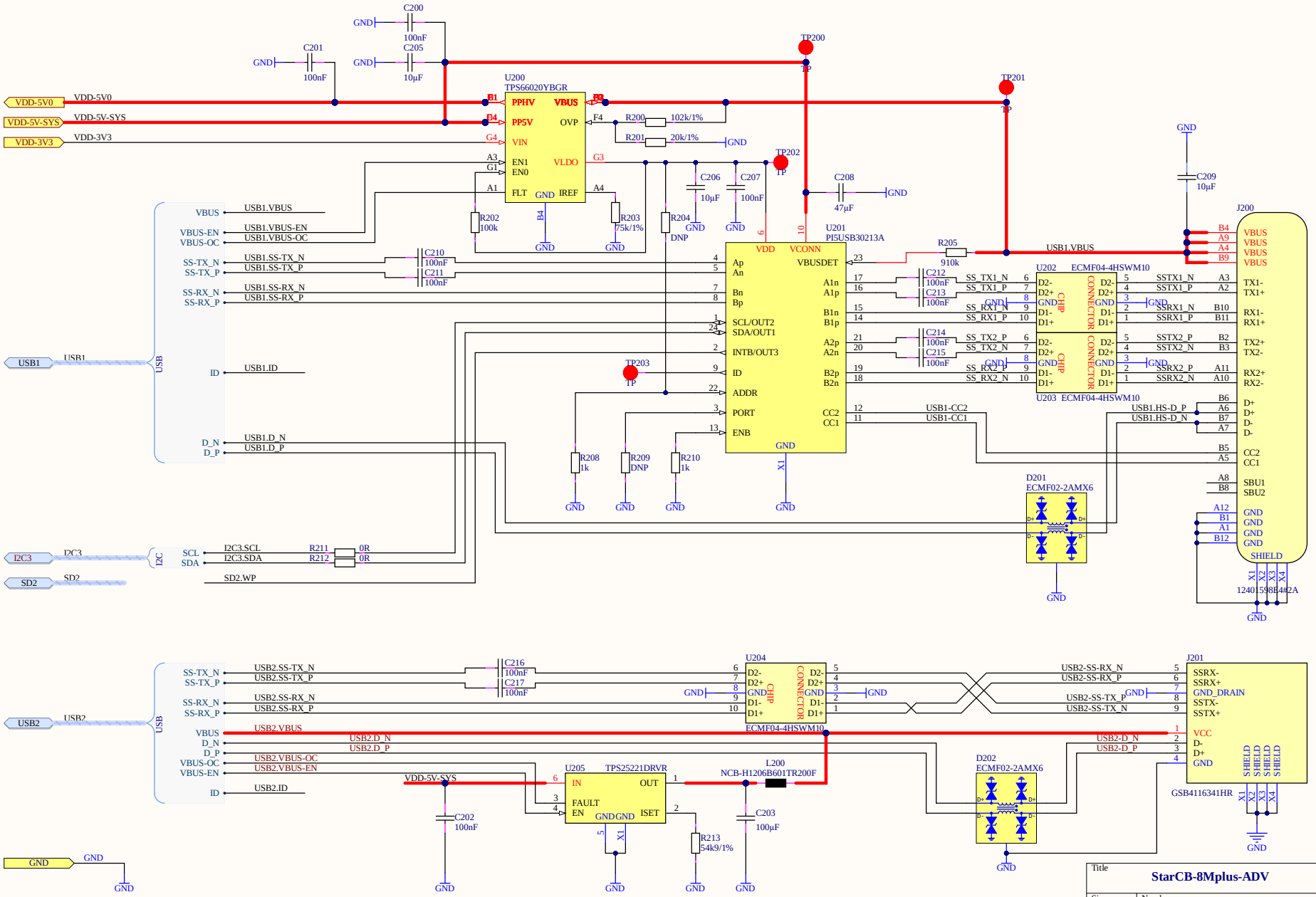

Title	StarCB-8Mplus-ADV	SoMLabs
Size: A3	Number	Revision: v1.1
Date: 11.26.2026		Sheet of
File: D:\Projekty\..\05_USBInterface.SchDoc		Drawn By: SoMLabs

Gigabit Ethernet 1

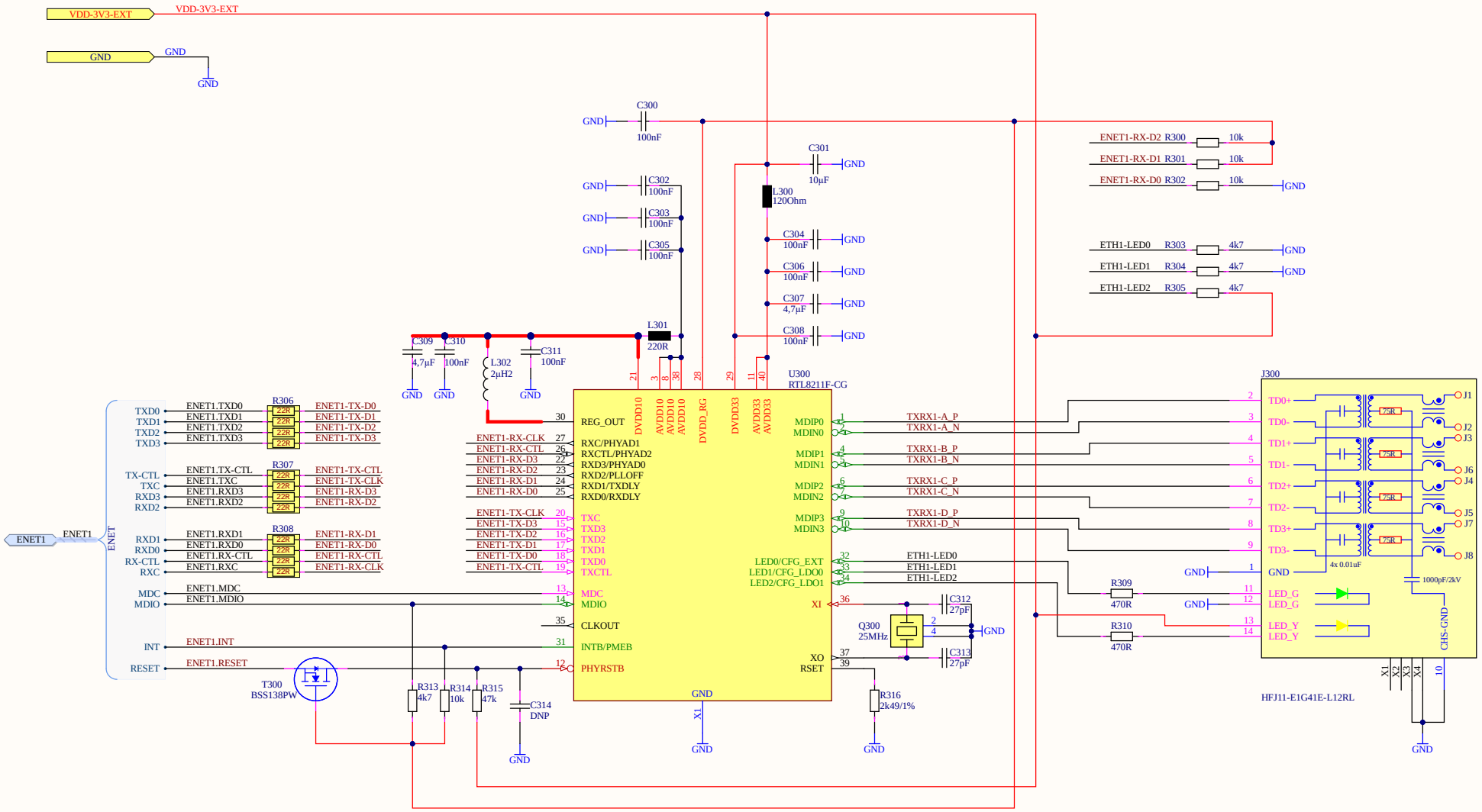

Title	StarCB-8Mplus-ADV	SoMLabs
Size: A3	Number	Revision: v1.1
Date: 11.26.2026		Sheet of
File: D:\Projekty\..\06_EthInterface1.SchDoc		Drawn By: SoMLabs

Gigabit Ethernet 2

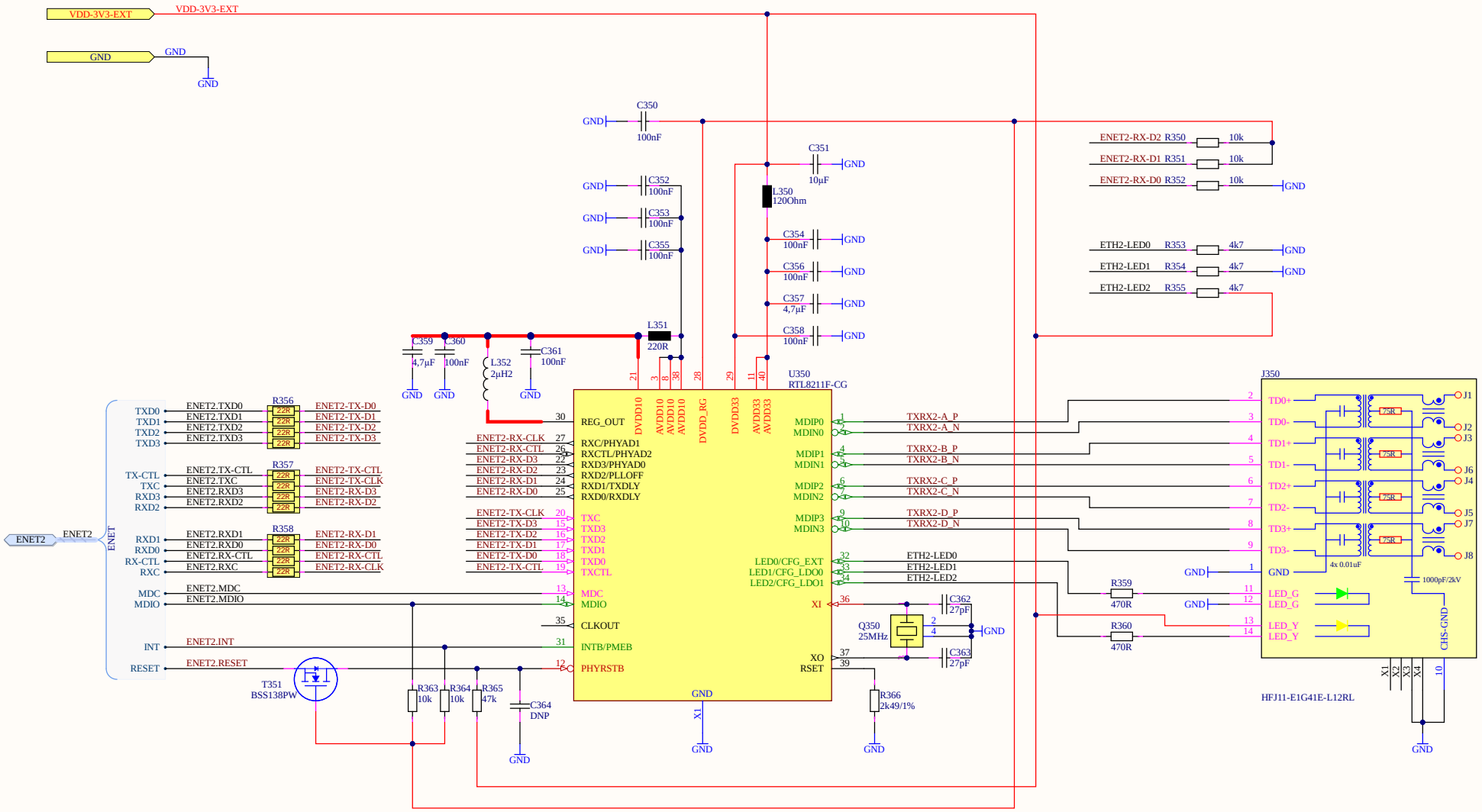

Title	StarCB-8Mplus-ADV	SoMLabs
Size: A3	Number	Revision: v1.1
Date: 11.26.2026		Sheet of
File: D:\Projekty\..\07_EthInterface2.SchDoc		Drawn By: SoMLabs

AUDIO-CODEC

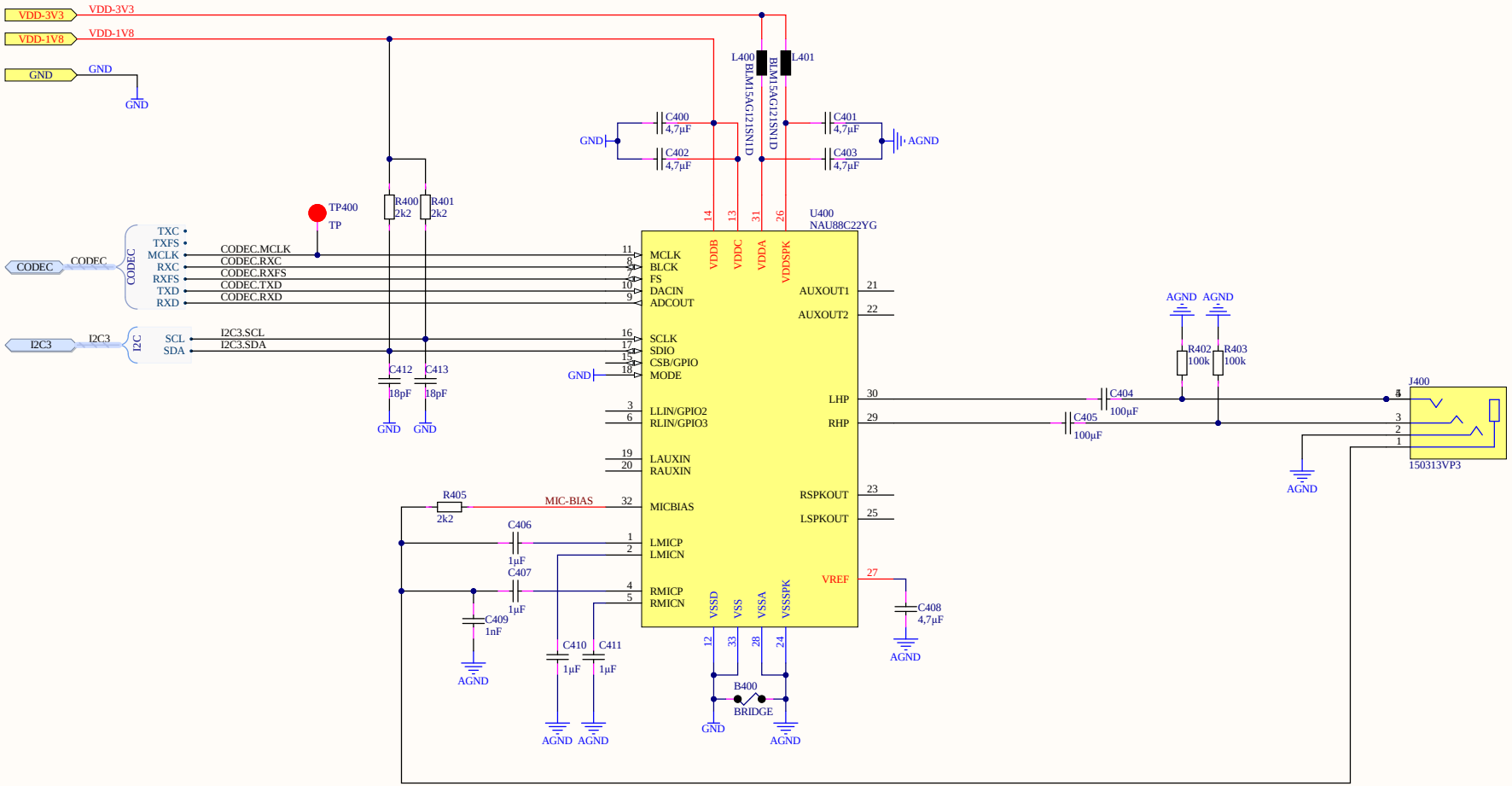

Title	StarCB-8Mplus-ADV	SoMLabs
Size: A3	Number:	Revision: v1.1
Date: 11.26.2026		Sheet of
File: D:\Projekty\..\08_AudioCodec.SchDoc		Drawn By: SoMLabs

MIPI Display/Camera IF

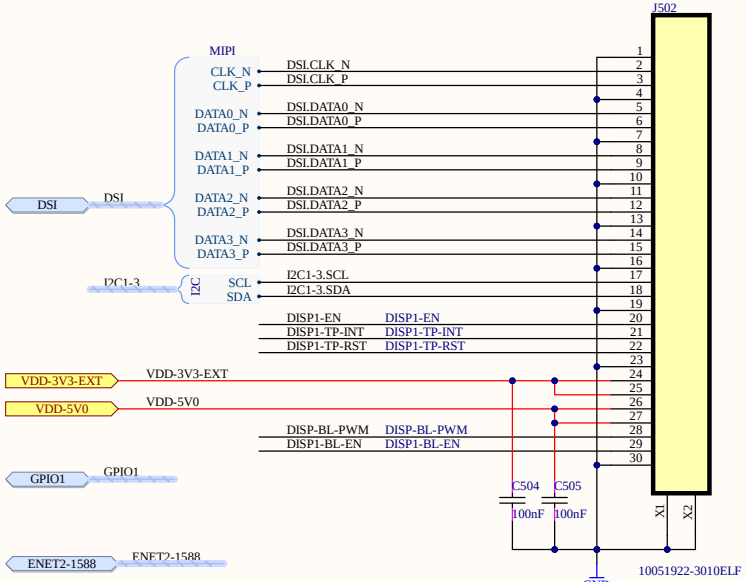

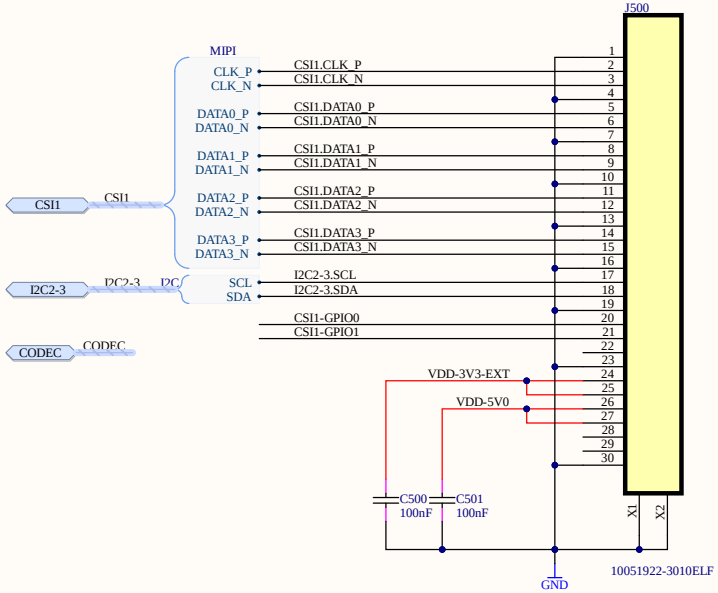

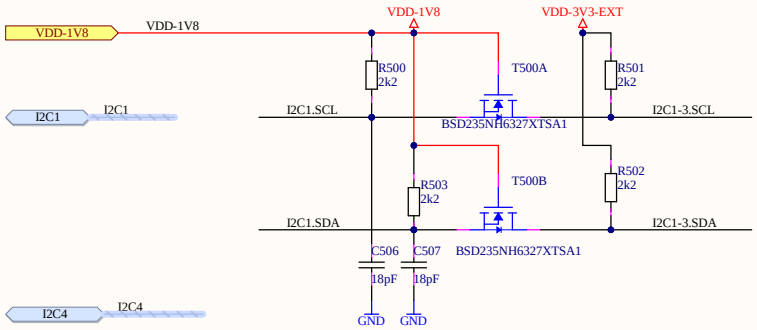

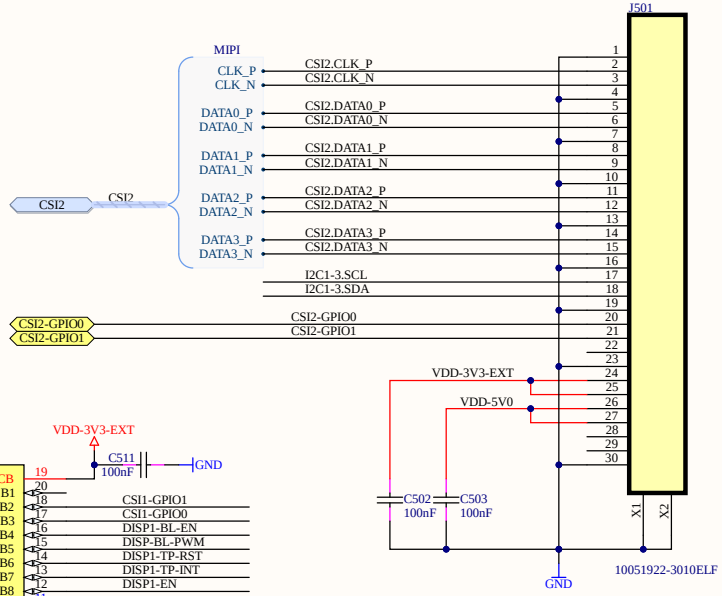

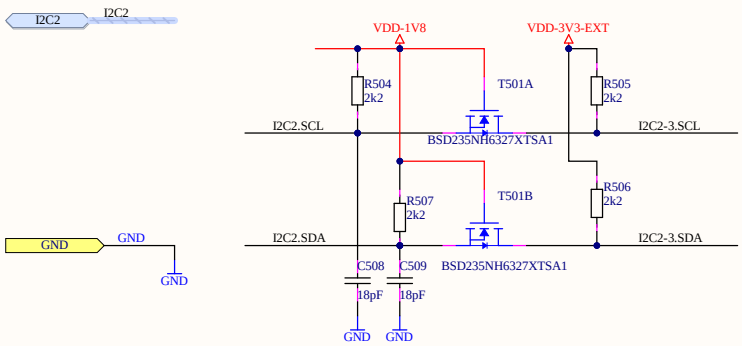

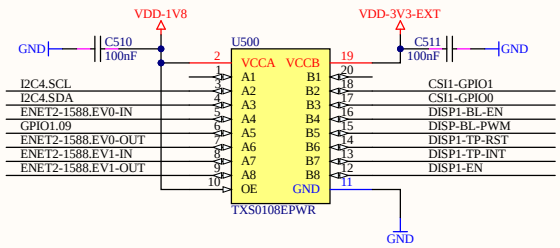

Title	StarCB-8Mplus-ADV	SoMLabs
Size: A3	Number	Revision: v1.1
Date: 11.26.2026	Sheet of	
File: D:\Projekty\..\09_MIPI_DSI_CSI.SchDoc	Drawn By: SoMLabs	

HDMI/LVDS display IF

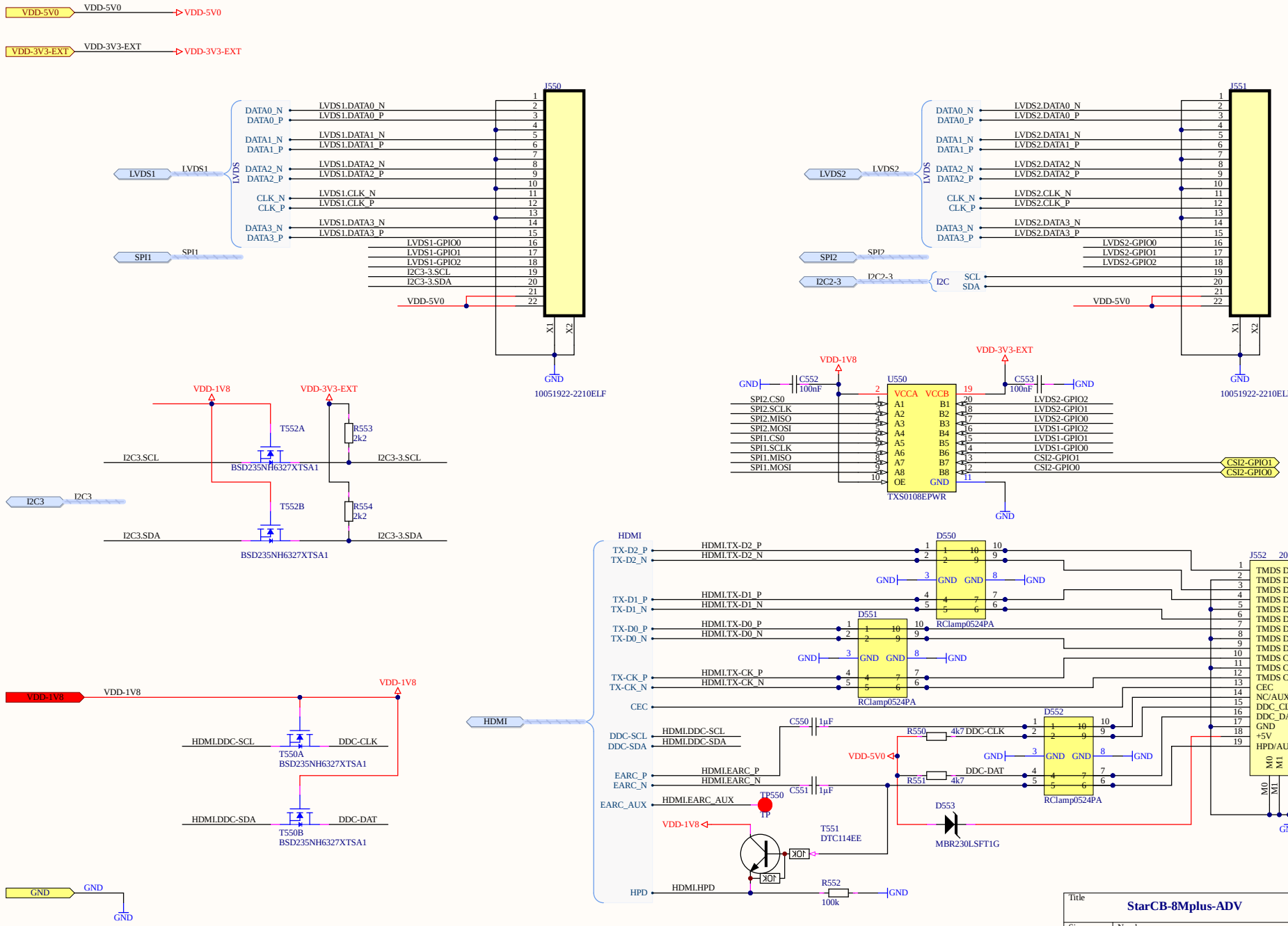

Title	StarCB-8Mplus-ADV		SoMLabs
Size	Number		Revision
A3			v1.1
Date:	11.26.2026	Sheet of	
File:	D:\Projekty\..\10_HDMI_LVDS.SchDoc	Drawn By:	SoMLabs

M.2 PCI-e interface

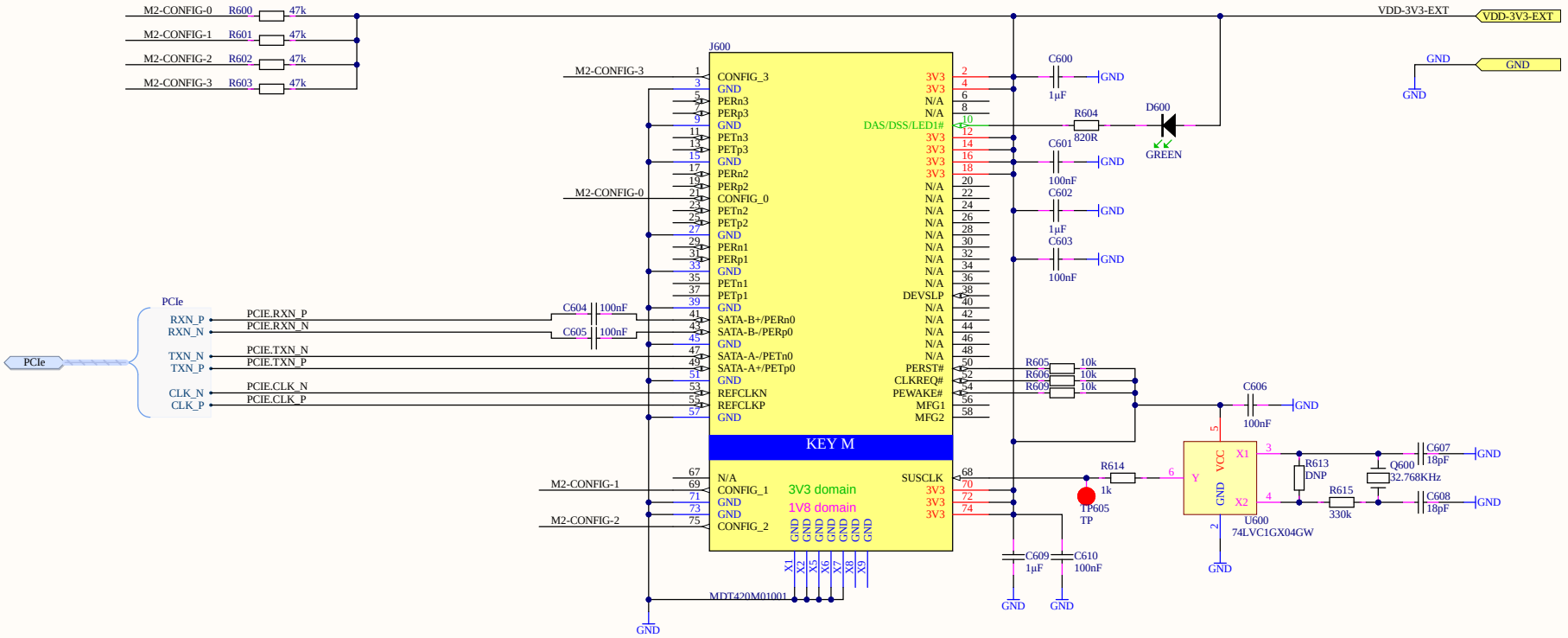

Title	StarCB-8Mplus-ADV	SoMLabs
Size: A3	Number:	Revision: v1.1
Date: 11.26.2026	Sheet of	
File: D:\Projekty\..\11_PCIe_M2.SchDoc	Drawn By: SoMLabs	

CAN/RS485 IF

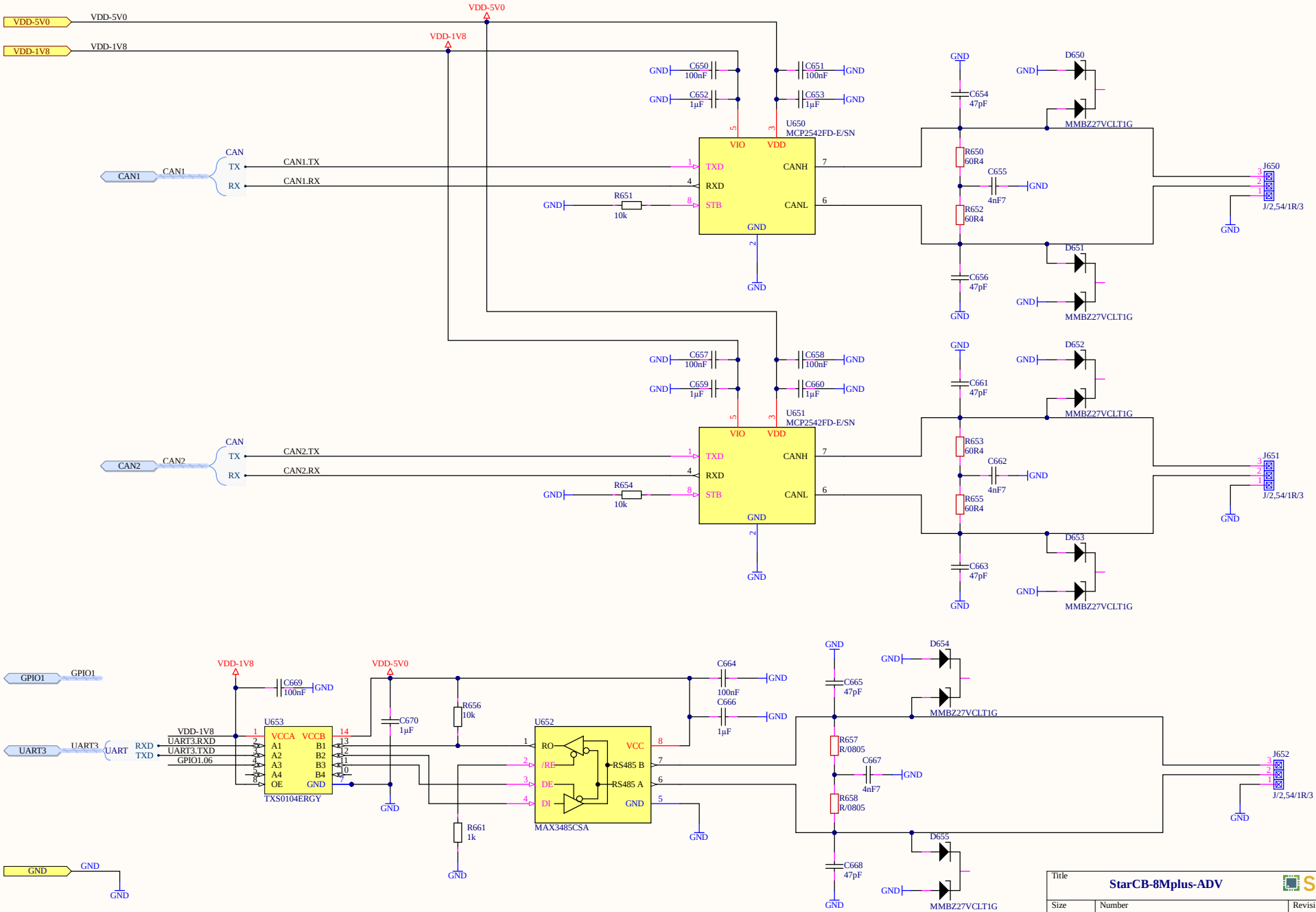

Title	**StarCB-8Mplus-ADV**	SoMLabs
Size: A3	Number	Revision: v1.1
Date: 11.26.2026	Sheet of	
File: D:\Projekty\..\12_CAN_RS485.SchDoc	Drawn By: SoMLabs	

LEDs, Buttons & GPIO

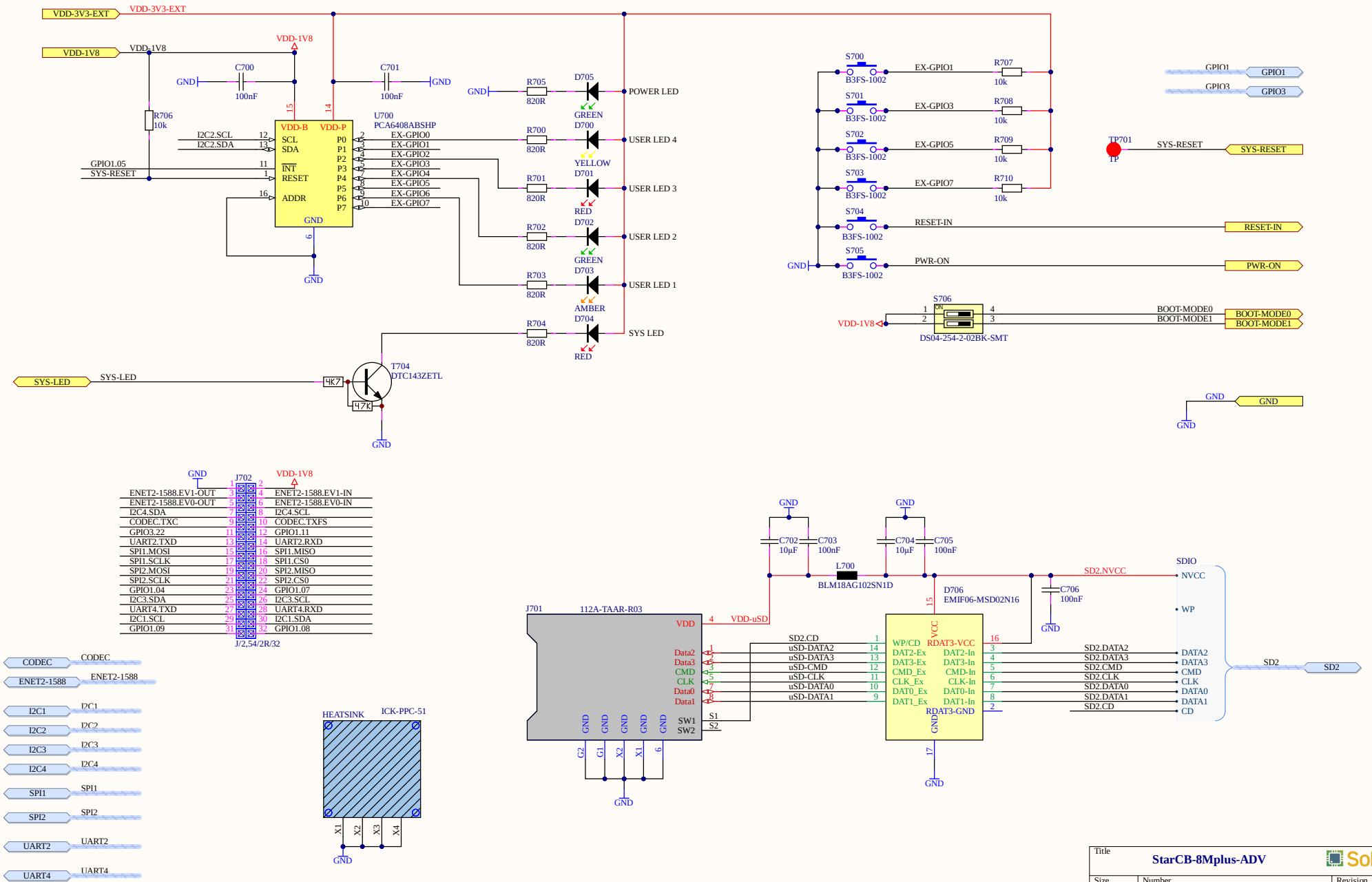

Title	StarCB-8Mplus-ADV	SoMLabs
Size: A3	Number	Revision: v1.1
Date: 11.26.2026	Sheet of	
File: D:\Projekty\..\13_LED_Buttons.SchDoc	Drawn By: SoMLabs	

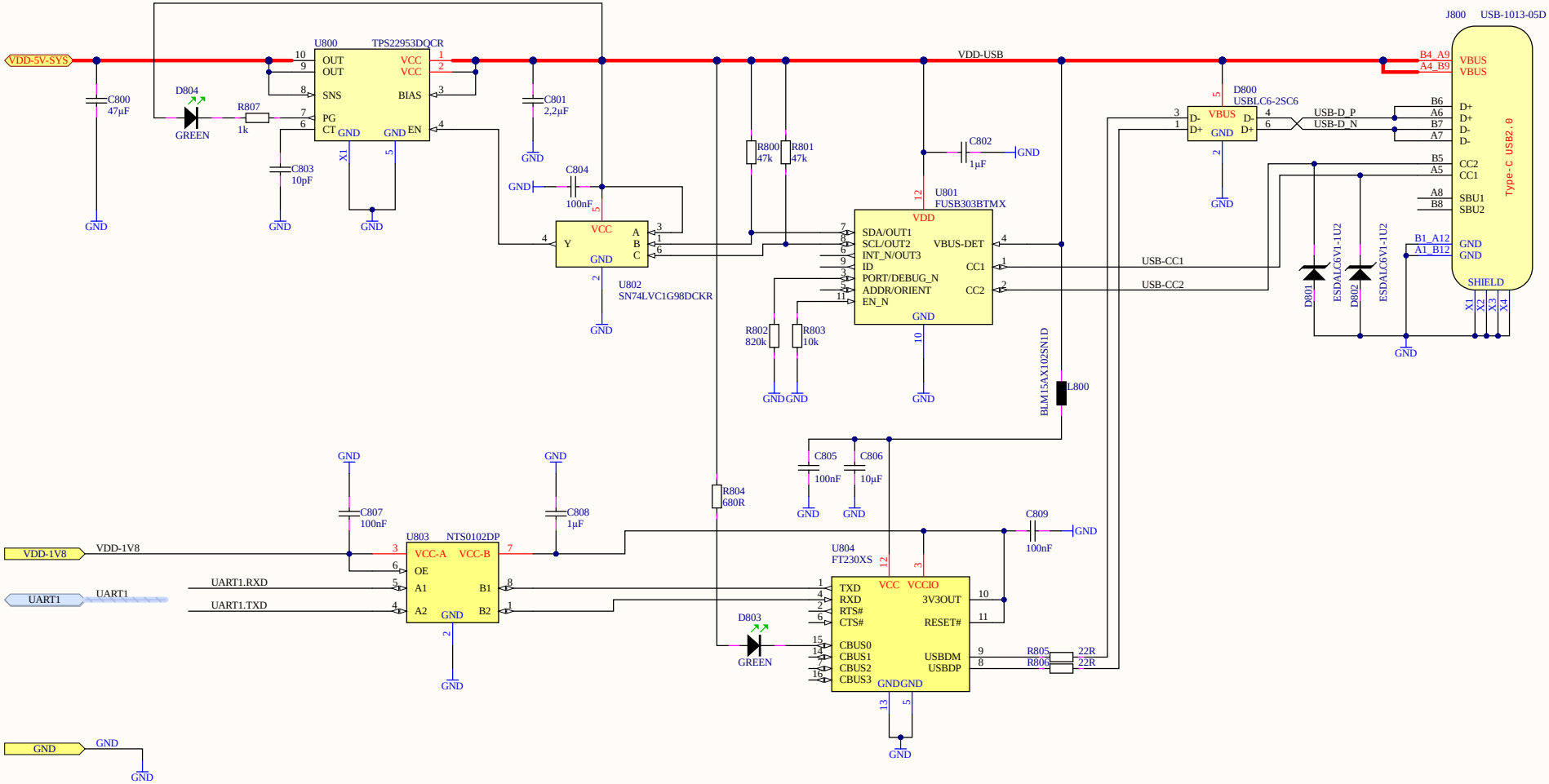

Title	StarCB-8Mplus-ADV	SoMLabs
Size: A3	Number:	Revision: v1.1
Date: 11.26.2026		Sheet of
File: D:\Projekty\..\14_DebugIF.SchDoc		Drawn By: SoMLabs